VERTICAL BOILER DEFECTS AND REPAIRS

By Sydney D. Scorer, A.M.I.Mech.E., M.I.Mar.E.

Reprinted from "The Steam Engineer" (London)

Published by
JOHN D. TROUP LTD.
90, High Holborn, London, W.C.1

PRICE 5/6
post free

SERVICE TO INDUSTRY

TROUP PUBLICATIONS

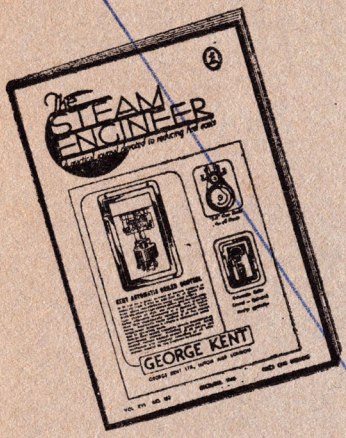

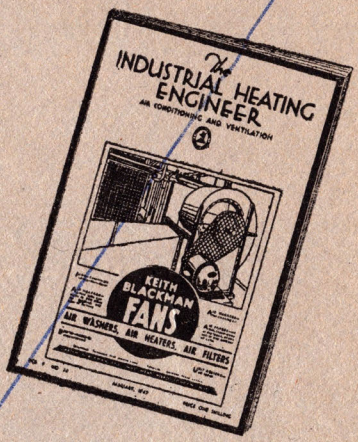

A journal devoted to the economic generation and application of steam. All interested in matters appertaining to steam power plant should take advantage of the practical benefits offered by *THE STEAM ENGINEER* Service.
PUBLISHED MONTHLY.
Single Copies 1/6 *post free.*
Annual Subscription 15/- *post free.*

THE INDUSTRIAL HEATING ENGINEER records the latest developments and practical economics of Heating, Air Conditioning and Ventilation as applied to industrial works and large buildings,
PUBLISHED ALTERNATE MONTHS.
Single Copies 1/6 *post free.*
Annual Subscription 8/- *post free.*

BOILER PERFORMANCE SIMPLIFIED

By SYDNEY D. SCORER, A.M.I.Mech.E.

A twelve-page booklet with diagrams, reprinted from *THE STEAM ENGINEER*, dealing, in a simplified manner, with the fundamentals of boiler operation in order to secure the highest efficiency.
Price 2/6 *post free.*

JOHN D. TROUP LTD.

90, HIGH HOLBORN, LONDON, W.C.1

Telegrams: Steemup-Holb, London. *Telephones:* Chancery 7856-7-8

Official Advertising Agents for the "Journal of The Institute of Fuel."
Advertisement rates on request to: S. W. CLARK, Advertisement Director.

VERTICAL BOILER DEFECTS AND REPAIRS

By Sydney D. Scorer, A.M.I.Mech.E., M.I.Mar.E.

Reprinted from "The Steam Engineer" (London)

Published by
JOHN D. TROUP LTD.
90, High Holborn, London, W.C.1

CONTENTS

	Page
The Strength of Shells, Furnaces and Endplates	3
Classified Summary of Defects, including Corrosion, Pitting, Grooving, Distortion and Fracturing, as recorded in 412 Vertical Cross-tube, Lancashire and Cornish Boilers	7
Defects and Repairs in Simple Externally and Internally-Fired Boilers	8
Vertical Cross-tube Boilers—Fire Level Defects—Firebox Fire-hole Seam Repairs—Increasing Working Pressure with Firebox Stays	11
Firebox Crown-Plate Corrosion—Overheated Cross-tubes—Blanking off Cross-tube Openings—Uptake Defects and Repairs	15
Uptake Connection Defects and Repairs—Mounting Block Grooving—Shell Crown-Plate Grooving—Repairs to Fractured Shell Crown-Plates, Longitudinal Seam Defects—Blow-off Tap Defects and Repairs—Corrosion at Mudhole	18
Ashpit Corrosion in Crane Boilers—Corrosion Problems with Vertical Multitubular Boilers	23
Corrosion of Upper Tube-Plates in Multitubular Boilers—Grooving at Shell Mountings of Multitubular Boilers—Fractures in Smoke-Tube Boiler UpTakes—Repairing Tube-Plate Fractures	27
Repairing Tube-Plates on Horizontal Multitubular Boilers—Inspecting Fire Tubes—Corrosion of Vertical Watertube Boiler Tube-Plate	30
Furnace Tables for Easy Calculation of Safe Working Pressure	34

ERRATA

"Vertical Boiler Defects and Repairs"

Page 4—Column 1, fourth and sixteenth line from bottom of page. The check rule quoted as $p = C_1 [(10 - t) - L] / D$ is incorrect and should read:

$$p = C_1 [10(t - 1) - L] / D$$

Reprinted from THE STEAM ENGINEER *(London), January-July, 1947*

VERTICAL BOILER DEFECTS AND REPAIRS

By Sydney D. Scorer, A.M.I.Mech.E., M.I.Mar.E.

A short series of articles dealing with vertical boiler maintainance.

THE STRENGTH OF SHELLS, FURNACES AND ENDPLATES

THE steam engineer responsible for the economical operation of steam plant regards a steam boiler as a means of producing steam of a given quality. When, however, steam boiler defects and repairs are under consideration he must view a boiler solely as a structure exposed to stress. From the initial stages of manufacture, the steel of which a boiler is made is subjected to stress, and each variation in steam pressure or in firing conditions causes a related variation in stress. Our present state of knowledge is inadequate for an analysis of the numerous and varied forces acting on a steam boiler, and the calculation of a true stress in many parts under working conditions is impossible. In consequence, the design and construction of a steam boiler are based mainly on a few empirical rules derived from a century or so of successful practice. This fact must be kept firmly in mind when considering the relative importance of a defect and the method of repairing it.

Fortunately, the various types of steam boilers have sufficient structural features in common to enable engineers to adopt a semblance of scientific method in studying them. The mechanical load due to steam pressure is taken as the most convenient basis of design, and the problem then resolves itself into an examination of the mechanical strength of the cylindrical, dished and flat surfaces which make up the structure of a steam boiler. When generally applicable formulæ representing the resistance of the surfaces to pressure have been obtained by a combination of experiment and calculation, a factor of safety is introduced to allow for the unknown variables encountered in practice. The factor varies from 4, in the case of shells, to as much as 6, in the case of furnaces, the higher figure being a measure of our ignorance of the unknown.

Considering first cylindrical surfaces: there are those exposed to internal pressure and those exposed to external pressure. The former are found in practice in boiler shells, and any textbook of mechanics proves that the pressure in a thin cylinder can be computed from $p = 2f.t/D$; where p is the pressure in lb. per sq. in., f is the stress in lb. per sq. in., t is the thickness and D is the internal diameter, in inches. An actual shell usually has a longitudinal seam of some sort, and its strength or efficiency relative to the solid plate depends on the type and proportions of the seam used. In ordinary examples it can be assumed without serious error that a seam that has been electrically welded but was not inspected during manufacture has a seam efficiency of 50 per cent., and this figure can be taken also for a single-riveted lap seam. A double-riveted lap seam has an efficiency of 60 to 65 per cent.: a treble-riveted lap seam, 70 per cent.; a double-riveted butt seam with two straps, 75 per cent., and a treble-riveted butt seam with two straps, 80 to 85 per cent. The formula for the pressure in a shell then becomes $p = 2\,f.t.k/100D$, where k is the appropriate seam efficiency and the other symbols are as before. By inserting for f the minimum tensile breaking strength of boiler plates made to British requirements, *i.e.*, 26 tons per sq. in. or 58,240 lb. per sq. in., we arrive at the bursting pressure of the shell $P = 2 \times 58{,}240 \times t \times k./100\,D = 1{,}165 \times t \times k/D$ lb. per sq. in. The minimum factor of safety allowed in British boiler shells is 4, so that we get the safe working pressure $p = 291.2 \times t \times k/D$. This means that there is a stress of 14,560 lb. per sq. in. in the plate.

We can now apply this knowledge to defects that may develop in a boiler shell. For example, if the thickness of a large area of shell is reduced by corrosion we know that no repair is necessary until the reduced thickness is less than $k.t/100$ since

the seam is already weaker than the solid plate. A 1-in. shell reduced to $\frac{3}{4}$ in. still has the same strength as the seam if the latter is a double-riveted butt type with two straps. A reduction to $\frac{1}{2}$ in., however, would probably involve the cutting out of the corroded area and the fitting of a patch, or the working pressure would have to be reduced to maintain a satisfactory factor of safety. When patching, the longitudinal seams of the patch must be as strong as the original longitudinal seams, or a pressure reduction will still be necessary.

Considering now cylindrical surfaces exposed to external pressure we find them represented by furnace and flue tubes. The tendency in these components is for the steam load to crush the tubes inwards, and this, in fact, occurs when the plate is overheated or unduly thinned in service. The design of a plain cylindrical furnace tube having a length not exceeding six diameters is based on an empirical rule of the type $P = c.t^n/L.D.$; where P is the collapsing pressure in lb. per sq. in., c is a constant, n is approximately 2, L is the length of the furnace in feet and D is its external diameter in inches. Various authorities use the rule and modify the constant and factor of safety, etc., to suit their own requirements; the British Board of Trade, for example, use a rule for steel furnaces: $p = c\,(t - 1)^2/(L + 24)\,D$, in which p is the maximum permissible working pressure in lb. per sq. in., c is 1,450 when the longitudinal seam is welded and 1,300 when riveted, t is the thickness of furnace plate in thirty-seconds of an inch, L is the length in inches between points of substantial support and D is the external diameter of the furnace in inches. A check rule is also used:

$$p = c_1\,[(10 - t) - L]/D$$

where c_1 is 50 for welded and 45 for riveted longitudinal seams, the other symbols being as before. The lower of the two pressures is taken as the safe working pressure.

At the end of this volume will be found a set of furnace tables which facilitate furnace calculations based on the above rules. In each case a certain furnace length and thickness has been assumed and the portions $c\,(t - 1)^2/(L + 24)$ and $c_1\,[(10 - t) - L]$ have been calculated separately for welded and riveted seams as, say, k and k_1, and tabulated. In using the table all one needs to do is to select the k or k_1 value corresponding to the given t and L, and divide it by the diameter. The result is the safe working pressure in accordance with the modern B.o.T. rules. The method can be used for any type of plain cylindrical furnace, the distance L being measured as indicated in Fig. 1. For example: A Lancashire boiler furnace is $\frac{1}{2}$-in. thick steel, has a length of 3 ft. and an external diameter of 39 in., longitudinal seam welded. Referring to the table the k value for a thickness

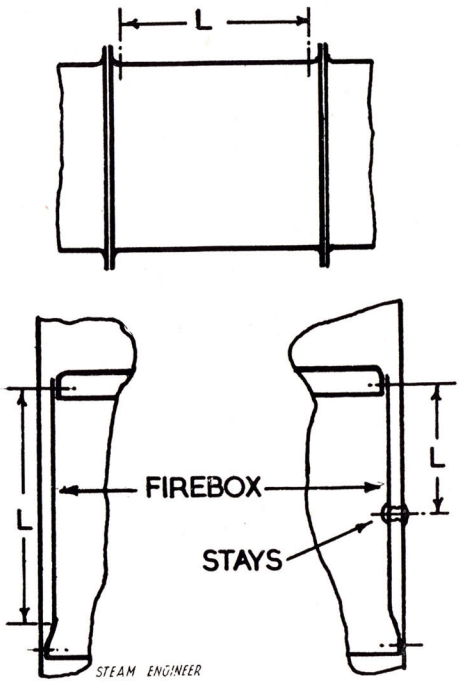

Fig. 1.—Method of measuring boiler furnace tube.

of $\frac{1}{2}$ in. and a length of 3 ft. is 5,437; then the safe working pressure is 5,437/39 or 139 lb. per sq. in. In the case of a vertical boiler provided with a row of stays at about mid-length the distance between the horizontal centre-line of the stays and the point of support farthest from it is taken as the value of L and the pressure is derived as already shown. Thus when a furnace tube has been reduced in thickness by corrosion, the new safe working pressure can be readily calculated on site.

In rules for furnaces of the corrugated type the length does not enter into the formula, which is $p = c\,(t - 1)/D$, where

c is 480 for Fox and similar furnaces and 510 for Leeds Forge bulb suspension furnaces, D is the external diameter in inches at the bottom of the corrugations, and the other symbols as before. A much greater reduction in thickness can be allowed in a corrugated furnace than in a plain one.

Another cylindrical surface exposed to collapsing pressure is the uptake of the common vertical boiler. One authority stipulates that the B.o.T. furnace rule shall be used to determine its safe working pressure but that the figure thus derived shall be halved. Another requires that the uptake thickness shall not be less than $\frac{3}{8}$ in., but this ruling is quite out of touch with actual practice, since corrosion soon diminishes the theoretically desirable thickness. For everyday work, when considering the safe working pressure of a more or less corroded uptake it is more convenient to use a simple rule $p = 3{,}000 \times t/D$, where t is the thickness in inches and D is the external diameter of the uptake in inches. This rule gives satisfactory results in practice for uptakes having a thickness of not less than $\frac{3}{16}$ in.; a figure less than that calls for immediate repair or replacement.

Dished endplates are usually dealt with by the boiler authorities as being portions of a thin sphere, an assumption that has no real foundation but gives a fictitious stress which serves as a comparative index. The thin sphere rule is used for purposes of calculation: $p = 2f.t/R$, where t and R (the internal radius of the endplate) are in inches. In British practice f may be used as high as 9,000 when R does not exceed one and a half times the diameter of the shell to which it is attached, but in American practice it may reach 12,000. When a manhole is formed in an endplate $\frac{1}{8}$ in. is subtracted from the thickness to allow for the weakening effect of the opening. In the case of dished endplates exposed to external pressure, *i.e.*, the dished firebox crowns of vertical boilers, f is reduced by about 33 per cent.

For flat plates exposed to pressure the basic formula is of the type $p = c.t^2/A$, where t is the thickness and A the area exposed, c being a constant the value of which depends on the method of staying used. The selection of a suitable constant is a matter of some skill in particular cases, and it is usually best to refer to the appropriate British Standard Specification. For example: when the sides of a rectangular steel firebox are supported by screwed stays the official rule is $p = 50 (t-1)^2/(a^2 + b^2)$, where t is the plate thickness in thirty-seconds of an inch and a and b are the pitches of the stays in inches. An important point to note in this respect is that if one stay breaks then one of the pitches is immediately doubled and the pressure must be reduced accordingly, or collapse of the plate will result. Thus, if a plate is 11/32 in. thick and the stay pitches are 5 in. by 5 in., the safe working pressure will be $50 \times 100/(25 + 25) = 100$ lb. per sq. in. If one stay breaks, one of the pitches becomes 10 in. and the safe working pressure is only $50 \times 100/(25 + 100) = 40$ lb. per sq. in. It must not be overlooked, however, that the above applies only to the plate; the cross-sectional area of the stay at the root of the thread must be adequate to carry without undue stress the load imposed on it by the pressure acting on area of plate supported by the stay. Again, in the case of a small Cornish boiler with an endplate unsupported by gusset or other stays, the constant used would be 110, and the rule for safe working pressure would be $p = 110 (t-1)^2/D^2$, where t is the thickness of the endplate in thirty-seconds of an inch and D is the diameter of the largest circle that can be drawn between the periphery of the endplate and that of the furnace flange.

The result of defects in a steam boiler is to reduce the ability of the boiler to withstand the various stresses to which it is subjected. A little consideration will show that the results of defects can be grouped in four principal classes:—

(1) Reduction in mechanical strength.

(2) Loss of shape causing a reduction in the pressure-bearing capacity of the part affected.

(3) Loss of sectional area, thus increasing the stress.

(4) Loss or weakening of supports.

In regard to (1), all rules for the safe working pressure assume certain properties in the material, such as a certain ultimate strength, yield point, and so forth, and if any of the working conditions alter the properties the safe working pressure is immediately affected. If a Lancashire boiler furnace becomes overheated the yield point of the plate material is gradually reduced until a position is reached where

it is less than the stress due to the steam load. Distortion or collapse then occurs. Similarly, when the area of firebox below the firehole of a vertical boiler is repeatedly heated and cooled the metal becomes fatigued, and ultimately gives evidence of this by fracturing. In extreme cases like those cited it may be necessary to replace the weakened metal by new.

Again, many of the rules assume a certain shape of plate, *i.e.*, circular, flat, spherical, etc., and were in fact derived from tests of plates of a given shape. Any change of shape, then, implies that the dimensions obtained by the use of an assumed rule may no longer apply, and other dimensions would be required for the new conditions. If a dished endplate is subjected to pressure on its convex side, it is designed according to the rule $p = 2f.t/R$, but if it distorts slightly it can no longer be considered to be part of a sphere and becomes more like a considerably weaker flat plate. The effect of pressure is to aggravate the weakening factor and collapse may ensue, since it now comes under the rule ct^2/A instead of $2f.t/R$.

The nett result of a loss of sectional area is that adjacent parts must share the load by working at a higher stress. This, in turn, reduces the factor of safety and may in time result in failure of the metal. A boiler shell, for example, may be so thinned by corrosion that its cross-sectional area is unable to bear the load, and ruptures. A furnace that is badly corroded about the fire level often fails along the thinned area by bulging inwards. A locomotive boiler firebox stay may be corroded in the body until the cross-sectional area is stressed to an excessive amount and it snaps; and so on. A failure of that kind brings us to (4), and it may become a serious matter if a number of adjacent stays are affected. In fact, some very disastrous explosions of locomotive boilers have resulted from firebox stay failures. There are, of course, many other types of stay which can fail, such as gusset angles, the stay tubes of tubeplates, etc.

Generally speaking, the object of a boiler repair is either to replace metal that has lost its original properties through overheating or fatigue, or to reinforce or replace a loss in cross-sectional area. If the bottom of a Lancashire boiler shell becomes overheated and badly bulged, the metal can no longer carry pressure with safety. The affected area must be cut out and the opening must be closed by a suitable patch. In very few cases should the original metal be left in place owing to the danger of its being perforated and corrosion proceeding undetected between the plate and the patch. If a furnace ring corrodes about the firelevel it is possible frequently to restore the original thickness by the deposition of electric weld metal. If, however, it becomes thinned to a dangerous extent, the metal having inadequate cross-sectional area must be cut out and replaced by a new piece of metal.

In carrying out repairs there are four principal methods available: the part can be patched; it can be electrically welded; it can be given additional support; or a complete new part can be fitted. Patching can be applied in most forms of repair, and it was in fact in many cases the only possible method until electric welding became more reliable. There are many variations of patching, but the basic principle is the substitution of sound for unsound cross-sectional area. The most obvious example is the fitting of a patch on a boiler shell or furnace ring that has corroded, but a patch may also take the form of an angle ring fitted in way of furnace ring grooving.

At one time autogenous welding was considered to be the solution of most boiler repair problems, but experience has shown that it has limits. The limits are determined not so much by the nature of the process as by the relative lack of skilled welding operators and the unintelligent use of welding by a certain class of boiler repairer. Oxy-acetylene welding, of course, should never be used in boiler work because of its local overheating effect, but it should be remembered that electric welding applied by a poor operator may set up a state of strain in metal more serious than the defect that is being repaired. Electric welding should never be applied to areas subjected to frequent thermal stress variations, nor to those where the safety of the structure depends wholly on a weld in a state of tension (a boiler shell, for example). Large areas of flat surface should never be welded because of the subsequent contraction stresses which even the most skilled operator cannot eliminate entirely. Welding should never be applied near a riveted

seam unless one is prepared to renew the rivets afterwards, nor should rivet heads be built up or covered by welding deposit. On the other hand, local corrosion at the lap edge of a shell seam can be restored by welding provided the area is not too large, and in the following pages examples are given where electric welding has been successfully employed. When the application of welding is being considered as the solution of an unusual problem, reference should be made to the authority certifying the boiler for Factories Act purposes.

Examples in which additional support is required to maintain the safe working pressure of a boiler are not common, but they occur from time to time. In the case of a corroded vertical boiler firebox its useful life may be extended in suitable circumstances by fitting a row of screwed stays at mid-length, thus halving the value of L in the furnace rule. Again, a distorted furnace ring in a Lancashire boiler can be strengthened by fitting an angle ring around the distorted circumference; suitable distance pieces being provided between the angle and the furnace ring to prevent overheating. A bulge in a flat surface can be reinforced by fitting an additional screwed or bar stay, while a weakened flat endplate can often be given a few more years of service by riveting to it an angle.

In certain defects, however, none of the above-described expedients will serve, and it becomes necessary to fit complete new parts. The uptake of a vertical boiler may have to be renewed once in the life of the boiler, while a locomotive boiler will have one, possibly two, replacement fireboxes during its working life. Most Lancashire boilers require the first three furnace rings replacing after 15 to 20 years of hard service, and the smoketubes of tubular boilers will, on an average, require replacement about every ten years. When new parts are thought to be necessary the condition and probable remaining useful life of the other parts of the boiler must be taken into account.

CLASSIFIED SUMMARY OF DEFECTS, INCLUDING CORROSION, PITTING, GROOVING, DISTORTION AND FRACTURING, AS RECORDED IN 412 VERTICAL CROSS-TUBE, LANCASHIRE AND CORNISH BOILERS

TABLE I.—INCIDENCE OF DEFECTS IN 183 VERTICAL CROSSTUBE BOILERS.

Defect.	Per cent.
Corrosion of uptake at water level ...	64
Firebox crown water-side pitting	54
Internal pitting of shell	46
External corrosion of shell	41
Firebox fire-level external corrosion ...	41
Firebox shell water-side pitting	34
External corrosion of crosstubes	30
Uptake, internal pitting	30
General external corrosion of firebox ...	21
Corrosion about man and mud-holes ...	20
Shell corrosion at blow-off tap	18
External corrosion of shell crown at uptake	18
Corrosion at mountings	16
Corrosion at fusible plug	8
Firebox crown-uptake grooving (internal)	8
Firehole lap fractures	7
Firebox stay water-side corrosion ...	5
Firebox longitudinal seam fractures ...	5
Ogee ring corrosion and grooving	4
Firebox crown grooving at firebox radius...	2
Firebox fire-level distortion...	2

TABLE II.—INCIDENCE OF DEFECTS IN 229 LANCASHIRE AND CORNISH BOILERS.

Defect.	Per cent.
Internal pitting of shell bottom	70
Water-side pitting of furnaces and flues ...	61
External wasting at furnace fire level ...	58
Blow-off elbow corrosion	52
Furnace flange grooving	35
External corrosion at blow-off recess ...	25
External corrosion at bottom of front endplate	25
General internal pitting of shell	23
Furnace mouth tool marks	18
Endplate grooving at furnaces and gussets	17
External corrosion at shell circ. seams ...	15
Furnace deformations	15
Furnace lower half external corrosion ...	11
Gusset stay defects	11
External corrosion of shell	8
Endplate internal grooving at sides ...	8
Shell bulges	7
Furnace fractures	5
Corrosion about man and mud-holes ...	4
Plate laminations	4
Corrosion at fusible plug	4
Defects under brickwork	3
Back endplate grooving at furnaces ...	1
Corrosion at mountings	0.5
Longitudinal seam leakages	0.5

DEFECTS AND REPAIRS IN SIMPLE EXTERNALLY AND INTERNALLY FIRED BOILERS

THE most elementary form of steam boiler is an uncovered vessel arranged over an open fire. This type has disadvantages in regard to the utilisation of the steam generated at the surface of the water, and it presents difficulties in effectively using the heat in the fuel. When only small quantities of low-pressure steam are required, as in dairies and similar places, a more advanced variation of this boiler is available in the design shown in Fig. 2. The externally-fired boiler sketched in the figure is usually constructed for working pressures up to 15 lb. per sq. in., and may be made of $\frac{3}{16}$-in. thick mild-steel plate throughout. Because of the low temperature on the fire side of the boiler, the low rate of combustion and the fact that the parts subjected to heat are normally fully water-cooled, thermal stresses are correspondingly low and the greatest wear and tear occurs through neglect on the part of the owner.

A boiler of this type is used in most cases for only a short period daily, and may thus stand disused and half filled with water over the major portion of its working life. During operation soot deposits collect in the annular space A, and during the standing periods the soot absorbs atmospheric moisture, so that an acid liquid spreads over the boiler plate and attacks it. The action results in thinning or even perforation of the plate; but when only a few square inches are affected the wasting can be made good by the application of electric welding deposit. If, however, the depth of wasting is more than about $\frac{3}{32}$-in., or a comparatively large area of plate is badly corroded, it will be necessary to cut away the plate until sound metal is reached, and then fit a single-riveted patch plate having the same thickness as the boiler plate. Corrosion of this nature can be avoided by cleaning the annular space at frequent intervals, and by lifting the boiler out of its housing at each annual thorough examination. This allows of wire brushing and the application of a coat of preservative.

When using certain classes of feed-water the internal side of the boiler plate may be marked by pitting, which will be accentuated over the bottom endplate if sludge is allowed to collect. On the other hand, the use of water containing a proportion of scale-forming salts invariably results in deposits on the shell sides and bottom, and the nature and thickness of the deposits may cause overheating of the plates in service. Usually, the bottom endplate is the part affected, and if the overheating is severe enough the metal will bulge and possibly split. A repair can be made by cutting out the fractured area and fitting a riveted patch. When hard water is the

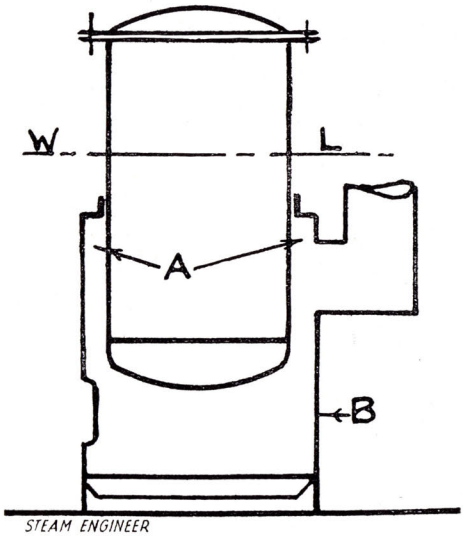

Fig. 2.—Simple externally fired boiler

only feed available, the interior of the boiler should be cleaned out at three- to six-monthly intervals, thus minimising the risk of overheating.

The top cover of this boiler is normally of ample strength for the pressure carried; but the area near the inner periphery of the joint ring is liable to a form of grooving corrosion, as indicated at C in Fig. 3A. Occasionally the wrong kind of joint ring is fitted, and the tendency then is for the cover to crack, as at D in Fig. 3B. Both these defects are dangerous if allowed to develop, as they may cause the complete rupture of the plate while under pressure. Resort to electric welding should not be made, but a new cover should be fitted.

In this instance prevention is better than cure.

The cover bolts, also, are usually of ample section for the designed working pressure; but leakage past the joint ring may in time cause a gradual reduction in cross-section, due to corrosion. The bolts must, therefore, be carefully examined for wasting of the shank or threads whenever the cover is removed, and any defective nuts or bolts replaced by new ones. The junction of each bolt head with its shank should be inspected for cracks, particularly when the cover has been distorted, as depicted in Fig. 3B. To prevent cover-joint leakages, the joint ring should be renewed annually, and every care taken to ensure even loading of the bolts when tightening the joint for the first time. Leakage can be prevented and satisfactory service ensured by following up the nuts while raising steam.

From Fig. 2 it will be noted that the bottom endplate of the boiler is secured by a welded seam and the weld is made well clear of the flange radius. This is essential since the region of greatest stress is at the flange knuckle, and a weld along that line might subsequently fracture under working conditions. This actually happened in one boiler, and the endplate was blown out bodily, allowing the contents of the boiler to escape.

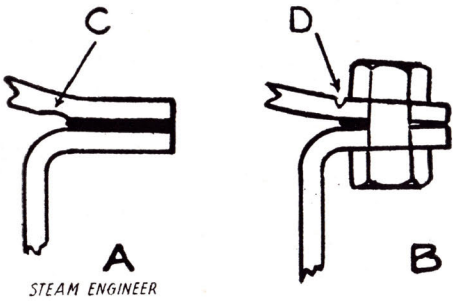

Fig. 3.—Cover defects.

As regards fuel economy, the boiler shown in Fig. 2 has the disadvantage that heat losses occur through the firebox casing, B, by radiation, and some boiler operators prefer a boiler of the design shown in Fig. 4. This boiler consists of a shell within a shell, the ends being closed by a solid ring welded in place at each end; while the resulting annular space holds the water and steam. The fire is thus completely contained by water-cooled surfaces, and radiation losses are reduced to those issuing from the boiler shell. Both shell and firebox are of small diameter, so they can be constructed readily of solid-drawn steel tubing. There is little to go wrong with a boiler so designed, and its common

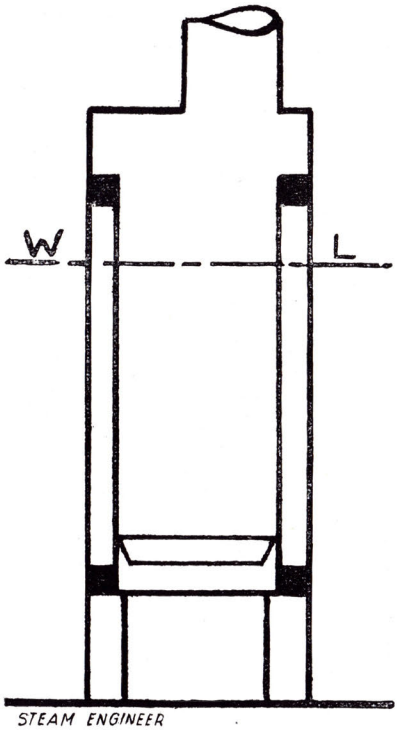

Fig. 4.—Simple internally fired boiler.

troubles are invariably due to neglect; principally from standing cold for long periods. The firebox walls become coated with sooty deposits, the acids in which cause gradual corrosion of the metal, and corrosion of the ashpit and smoke-hood casings may also develop from the same source. The principal defects are due to the inaccessibility of the boiler interior. When using hard water as feed over a period of a few years, deposits build up on the water side of the firebox, and the lower part of the annulus may even choke with sediment and loose scale. The firebox then overheats about the fire level, and may bulge and crack. A moderate depth of wasting can be remedied by welding, but any appreciable depth necessi-

tates the fitting of a new firebox. At that state the purchase of a new boiler is often the most economical solution.

The advantages of the boiler designs illustrated in Fig. 2 and Fig. 4 can be obtained by using the construction shown in Fig. 5. In this design the shell A is enclosed at its top end by an easily-removed bolted cover similar to that of the boiler in Fig. 2, while the lower end is enclosed by an internal water-cooled firebox, B. The fuel is burnt on a grate arranged in the front part of the firebox, and the products of combustion are guided by the baffle D to sweep over the crown and back, leaving the boiler at the bottom by means of the smokebox, C. This type is employed for evaporative capacities of up to 100 lb. of steam per hour and for working pressures up to 30 lb. per sq. in. The rate of combustion is low, so that the firebox conditions are good in regard to thermal stresses.

Slight general external corrosion of the firebox may become apparent after long standing periods, but the most serious defects develop at the normally inaccessible space at the back of the baffle. Although the makers provide a convenient soot door for cleaning out C at regular intervals, the precaution is more often neglected, and soot collects at times up to beyond the firebox bottom seam. Corrosion at the back of the baffle is thus heavy, and not infrequently results in the partial disintegration of the shell extension which forms the ashpit, and in penetration of the firebox wall. If observed in time, the shell extension can be repaired by fitting a patch, and the firebox, unless extensively wasted, can be built up by electric welding. But if the firebox metal has been penetrated it will be necessary to cut out the corroded area and insert a suitably shaped piece of new plate, secured to the firebox circumferential seam by rivets, and to the rest of the firebox plate by an electrically-welded butt seam. A repair of this sort must be done by a skilled boilermaker and welder and the inserted plate should, of course, have a thickness equal to that of the firebox metal. Because of the above-described defects, the smokebox should be regularly raked out and the boiler should be turned on its side for full visual inspection of the firebox at each annual thorough examination.

The baffle, D, extends across the full width of the firebox, and if originally fitted rather tightly it may in the course of time wear deeply into the firebox wall as a result of the difference in the expansive movements of the baffle and firebox when the boiler is in service. It is therefore advisable to remove the baffle every year to facilitate examination of the firebox, and the removal is best done when the boiler is on its side.

When hard water is fed into a boiler of this design the internal surfaces should be exposed and cleaned at least once in every three to six months. Neglect of this elementary precaution will result inevitably in the accumulation of scale at the bottom of the annular space, accompanied, possibly, by overheating and bulging of the firebox metal. The author has encountered a few

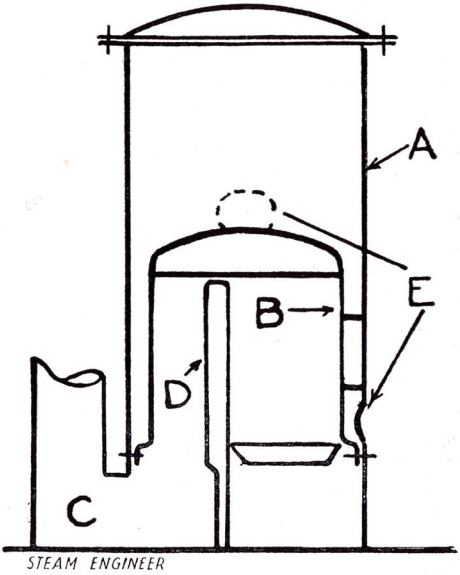

Fig. 5.—Small-capacity internally fired boiler.

instances of this when even the use of a hammer and long chisel bar was insufficient to remove the cement-like scale burnt into the metal. The fault lies not in the boiler design but with the operator when this situation develops. If reasonably good feed water is used, however, an internal scrape and washout through the hand holes, E, may dispense with the removal of the top cover at three to six monthly intervals. In refitting the hand hole covers care must be taken to ensure that the joints are perfectly tight. The metal about the handholes is not always

reinforced by a compensating ring, and only a slight reduction in plate thickness seriously weakens the cross-section, so that when the cover bolt is tightened the plate is distorted, making it impossible to obtain a tight joint. Corrosion at the hand holes should be remedied immediately by forming a reinforcing ring composed of welding deposit about $1\frac{1}{4}$ in. wide and approximately $\frac{1}{8}$ in. " proud " of the level of the original metal.

Internally, these boilers will continue to give satisfactory service for many years without developing any serious defects. It all depends on the care given to them. The firebox crown is subjected to the greatest intensity of heat and may, therefore, pit a little ; but the pittings will not be of any great depth unless the boiler is consistently forced. A certain amount of internal corrosion in the form of isolated pitting of the shell and firebox sides can also be expected, due principally to idle periods, and the cover and cover-bolts may develop defects similar to those mentioned in connection with the boiler illustrated in Fig. 2. The condition of the fusible plug should be noted at each annual examination, when it should be, preferably, changed for a spare one, and should the periphery of the screwed hole corrode, it can be detected in time and repaired by a ring of welding deposit. The hole can then be retapped and the plug screwed back into place. But defects of this nature will be dealt with more fully when we consider vertical cross-tube boilers.

VERTICAL CROSS-TUBE BOILERS—FIRE LEVEL DEFECTS—FIREBOX FIRE-HOLE SEAM REPAIRS—INCREASING WORKING PRESSURE WITH FIREBOX STAYS

THE vertical cross-tube boiler is widely used in small factories and on temporary sites, and its general construction is familiar to all steam engineers. It may be designed with dished shell and firebox crown plates, but boilers with flat crown plates are also made. Vertical crosstube boilers are normally designed for evaporative capacities ranging from 100 to 2,500 lb. of steam per hour, and for working pressures of from 30 to 120 lb. per sq. in. The smallest size is about 2 ft. dia. by 4 ft. high, and the largest about 6 ft. dia. by 14 ft. high.

As many of the defects to which this boiler is liable in service are common to other boilers of its class, the cross-tube type will be dealt with at some length. The most heavily worked part, and that most prone to develop defects, is the internal firebox. The boiler is frequently entrusted to the care of unskilled labour, the sole idea of which appears to be the shovelling of coal through the fire-door. Combustion rates that were never anticipated by the boiler designer are thus attained on the grate, and it is not unusual to see flame rising out of the chimney top. Excessive firebox temperatures are therefore fairly common, and unfortunately the maximum temperature obtains over that part of the firebox with the most sluggish water circulation, *i.e.*, in the vicinity of the fire level. Unless the metal is perfectly clean on the water side a certain amount of over-heating is unavoidable, and consequently the plate surface is gradually wasted away on the fire side. (Note: the wasting may be intensified when ashes are allowed to remain on the grate during lengthy standing-empty periods.) In addition, any steam bubbles formed on the water side tend to cling to the plate because of the restricted water circulation, so that conditions favourable to the development of pittings are provided. The merging of the pittings into a more or less continuous groove around the circumference of the foundation ring is assisted by the conventional method of bell-mouthing the firebox where it is secured to the shell, a bellows action resulting from firebox movements caused by pressure and temperature changes within the boiler. The grooving and pitting are likely to become general corrosion of the lower internal surfaces of the shell and firebox, as indicated in Fig. 6A, if sludge is allowed to collect at the bottom of the annulus during standing periods.

It will be appreciated that the bottom end of the firebox carries the major part of the downwards steam load on the firebox, and any reduction in thickness of that portion is a serious matter. Its condition must be checked at each annual survey, and a method of assessing fire-level wastage by means of a straight-edge is suggested in Fig. 6A. On the water side the use of a mirror through one of the bottom mud-holes sometimes shows up

corrosion of the plate, and occasionally it is possible also to insert the hand and feel if the surface is roughened. The smooth nature of the wastage on the fire side, together with the shape of the firebox where it merges into the bell-mouth, however, makes it difficult to detect thinning of the plate, but where there is any doubt a drill test should be applied. When observed in time, fire-side wasting can be repaired at a comparatively small cost by applying runs of welding deposit until the original thickness has been built up. When, however, the wasting is deep, the corroded area may have to be cut out and a patch piece inserted. The bottom seam of the patch can be secured to the firebox-shell seam, and the other edges of the patch attached to the firebox plate by a butt-welded seam.

The necessity for a patch must be decided from the dimensions of the firebox and the present working conditions. For example, if the firebox is 3 ft. dia., $\frac{1}{2}$ in. thick, by 4 ft. 6 in. high between points of support, it was originally suitable for a safe working pressure of 116 lb. per sq. in. If it is now found that the area of the fire level is badly wasted and that two or three drill tests give an average remaining thickness of $\frac{5}{16}$ in., then according to the British Standard Specification rule, the present safe working pressure is 42 lb. per sq. in. A pressure of 42 lb. per sq. in. may, with a little rearrangement of processes, be quite suitable for the purpose for which the boiler is required, and, if so, no repairs will be necessary. On the other hand, it may be that 50 lb. per sq. in. is the minimum pressure that can be utilised and that to dispense immediately with the boiler would cause serious financial loss in the factory. In this situation it may be possible to work the boiler with a reduced factor of safety in the firebox. The normal factor of safety in the official rules is 5, but since the normal shell factor is 4, there should be no objection to using a similar factor for the firebox, for a limited period, and with full knowledge of the risks being undertaken. This often allows a factory to carry on until repairs can be organised or a new boiler obtained. Thus, in the example given, the use of a factor of safety of 4 would give a safe working pressure of 5/4 times the reduced pressure; that is $1.25 \times 42 = 52$ lb. per sq. in. approximately. The higher safe working pressure could be allowed for a period of from three to six months, depending on the degree of care given to the boiler under customary working conditions.

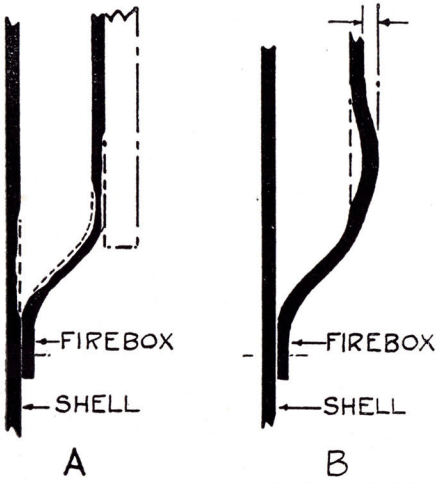

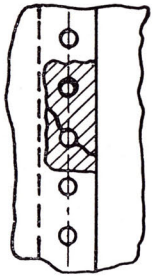

Fig. 6.—Fire-level defects.

When scale deposits are allowed to accumulate in the annular space surrounding the lower part of a firebox, overheating is likely to take place, and the metal may bulge as shown in Fig. 6B. Bulges up to 1 or 2 in. in height, depending on the diameter of the firebox, are not serious, nor do they require immediate attention. The deciding factor is the thickness of metal remaining at the crest of the bulge. The thickness can be determined by drill test, and if the distorted metal has a thickness equal to about 60 to 70 per cent. of the original plate, repair is unnecessary, but the affected area must be kept under observation. This is best done by making a suitable gauge which can be applied to the bulge at weekly shut-downs; any variation then being readily visible. If, however, the water side of the plate is not kept clean the bulge may subsequently extend and rupture at the crest. In such circumstances, the bulged area must be cut right out down to the bottom riveted

seam and a patch inserted as described in a preceding paragraph. On account of the heavy stresses carried by a lower part of the firebox it is not advisable to fit a patch having a circumferential length greater than about one-quarter of the firebox circumference, unless the firebox is removed from the shell to allow of welding on both sides of the plate butt edges or to allow the fitting of a properly riveted patch. In either case, the cost of a new firebox should be carefully compared with the estimated cost of the repair, at the same time taking into consideration the condition of the other parts of the boiler. In many cases it will be found advisable to replace the boiler.

Another fire-level defect often found in boilers having lap-riveted vertical seams arises from the double thickness of metal at the seam lap. The lap edge of the plate fractures at the rivet holes at from the fourth to the seventh rivet from the bottom, but unless the fractures extend beyond the rivet hole into the solid plate they are best left as they are, provided no leakage is taking place. If leakage occurs, the fracture can be V-d and electrically welded, but the work must be done by a skilled operator or the result sketched in Fig. 6c may develop. In this example a lap fracture occurred at one rivet hole, and the plate was improperly welded over the cross-hatched area. After only a short period of service the weld metal and the plate fractured, the latter, this time, being affected on the inner side of the rivet hole. To make a satisfactory repair it was necessary to remove all the original welding and the two affected rivets; the fracture was then V-d correctly and welded and tap rivets were fitted. The second repair was still in good order 12 years later and no extension of the fracture has been noted.

Incidentally, leakage at the vertical seams of this type of firebox must be kept under observation, as the erosive action of the issuing sedimentary water rapidly wears away the surface of the plate. Wasting usually occurs over a fan-shaped area, and the author has known a $\frac{1}{2}$ in. plate be reduced to $\frac{1}{4}$ in. in thickness in the course of a few months. When this happens, local corrosion can be remedied by electric welding, but a serious reduction of thickness over a large area necessitates a patch being riveted over the opening left when the corroded area has been cut out. Tap rivets, of course, are used.

The fire-hole seam is another part of a vertical boiler liable to give trouble due to a local concentration of metal, poor water circulation and the accumulation of deposits. Only in the very largest sizes of boiler is this seam protected from the radiant heat of the fire by means of a sleeve projecting into the fire door opening, and in all designs the narrow water spaces are excellent places for the accumulation of hard deposits. At each cleaning period, therefore, it must be made certain that these spaces are quite clear. Lap fractures in the firebox plate, around the lower part of the fire-hole seam, are unfortunately fairly frequent, but, like those mentioned above, they should be left alone unless leakage occurs or the fractures extend into the solid plate beyond the rivet hole. When attention is necessary, V-ing and electrically welding the fracture is normally a satisfactory solution. Some boiler operators, though, have a habit of carrying extremely thick fires, so that in the course of time the firebox metal in the vicinity of the fire hole becomes hardened because of the repeated heating and cooling, and additional cracks are found at each annual examination. The application of welding may result only in the formation of new cracks in other parts of the seam, and may even cause a lengthy fracture in the solid plate below the seam. When the firebox plate has thus deteriorated the only practical remedy is to replace the plate by cutting out a strip extending from the fire-hole seam to the bottom circumferential seam of the firebox and fitting in a new piece with a thickness equal to that of the original plate, as indicated in Fig. 7. The top and bottom limits of the patch are fully secured by rivets, while the vertical seams are formed by V-ing the plates and electrically butt-welding the edges to the firebox plate. A repair of this sort should preferably be subjected to a water-pressure test on completion of the work, to prove the soundness of the welding.

Much preventable damage is occasioned to vertical boiler fireboxes by the practice of allowing ashes and soot to adhere to the heating surfaces during idle periods. Such substances are very hygroscopic, and when they absorb moisture from the atmosphere acids are released to attack the adjacent metal. Coal with a high sulphur content may have an equivalent effect. The corrosive action causes a general roughening and reduction in the plate thickness over the entire surface of the firebox and crosstubes, and often oxide layers of

measurable thickness break off when the plate is hammered or scraped. Additional local corrosion may develop when, for instance, a fusible plug leaks where it is screwed into the firebox crown, or when the boiler chimney is left uncovered during wet weather. If a boiler is expected to be out of service for more than a week, the firebox should be cleaned down to bare metal and be given a coating of preservative paint.

A general reduction in the firebox plate thickness is a serious matter affecting the safety of the boiler, and the average remaining thickness must be determined without delay by drilling several test holes. The thickness may be found to be insufficient to justify the original safe working pressure. Take the previous example of a 3 ft. dia. by $\frac{1}{2}$ in. by 4 ft. 6 in. high firebox, and assume that the average thickness is now only $\frac{5}{16}$ in. We have seen that the safe working pressure at this

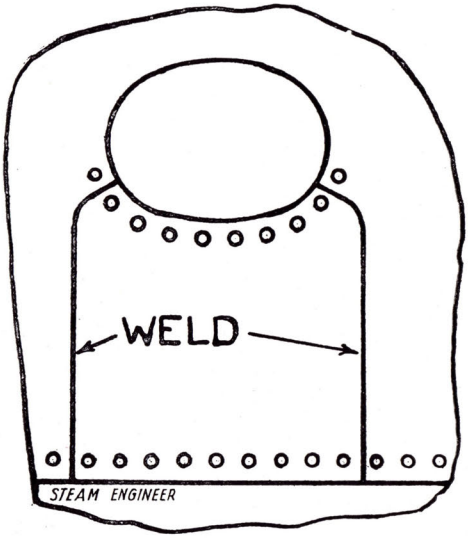

Fig. 7.—Firebox fire-hole seam repair.

thickness is only 42 lb. per sq. in., and only by a drastic reduction in the factor of safety could it be raised to 50 lb. per sq. in. Suppose, however, that the rest of the boiler structure is in good condition, fit for several more years of service but hardly good enough to justify the expense of a new firebox. Now in new boilers it is permissible to fit one or more rows of screwed radial stays between the shell and firebox, so long as the stay diameter is not less than $\frac{7}{8}$ in. (fine threads) and the stay pitch *inside the firebox* is not greater than 14 times the firebox plate thickness. If

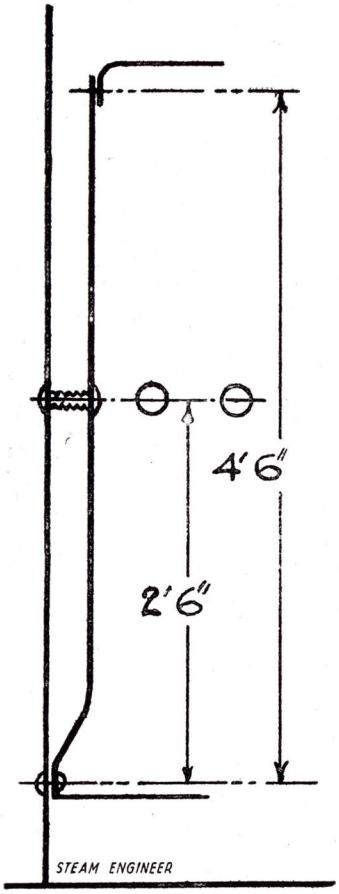

Fig. 8.—Firebox stays increase working pressure.

then in the particular example considered it is possible to fit a row of stays about 2 ft. 6 in. up from the firebox bottom seam, as shown in Fig. 8, the firebox length for purposes of calculation becomes 2 ft. 6 in., and is no longer 4 ft. 6 in. A firebox 3 ft. dia. by $\frac{5}{16}$ in. thick by 2 ft. 6 in. high is suitable for a safe working pressure of 60 lb. per sq. in. If that pressure serves the purpose of the boiler owner, the boiler could work at it for some years longer.

FIREBOX CROWN-PLATE CORROSION—OVERHEATED CROSS-TUBES—BLANKING OFF CROSS-TUBE OPENINGS—UPTAKE DEFECTS AND REPAIRS

INTERNALLY, a vertical boiler firebox may pit and corrode at the foundation ring, as already noted, and some pitting and corrosion of the firebox sides may also take place due to the poor water circulation in the space surrounding the firebox. The last-mentioned pitting is usually of an isolated nature, unless the feed water is corrosive, in which case the pittings may run together and assume the confluent form. There are a few cases on record where a corrosive feed water has established conditions favourable to grooving at the lap edge of a firebox vertical riveted seam, but such instances are the exception. Usually the boiler is in a low condition when this defect develops, and its early replacement must be considered.

The firebox crown is the part liable to the greatest intensity of pitting on the water side, the pits extending well into the plate. When they are one-third to one-half of the plate thickness they can be cleaned out and filled by electric welding, or, in some instances, screw-plugged. In an old boiler it will be found that the pits have merged to cause irregular wasting of the crown-plate, and when this coincides with smooth wasting on the fire side the plate may be seriously thinned. The smooth wasting is difficult to detect visually and by hammer test, and when it is suspected two or three test holes should be drilled.

Considering now the average thickness thus determined, we find that the official rule for the safe working pressure of an unstayed flat crown-plate is $p=80\ (t-1)^2/D^2$; where t is the thickness in thirty seconds of an inch and D is the diameter in inches of the largest circle that can be drawn on the flat portion of the crown without cutting into the radii of the crown-plate flanges. If in a given boiler the largest circle diameter is 10 in., as indicated in Fig. 9, and drill tests give an average thickness of $\frac{5}{16}$in., then the safe working pressure will be 64.8 lb. per sq. in. In the case of a dished form of firebox crown the procedure in the event of heavy corrosion is similar. We must first know the radius of the crown-plate on the water side, as well as the average remaining thickness, and the official rule gives $p=300\ (t-1)/R$; where t is the thickness of the plate in thirty-seconds of an inch and R is the radius of the crown-plate in inches. For example, if the crown radius is 36 in. and the average remaining thickness is $\frac{5}{16}$in., the safe working pressure will be 75 lb. per sq. in.

Thus in the above examples the safe working pressure of the boiler must be reduced to the figures calculated, or new firebox crown-plates will have to be fitted. Usually, however the last-mentioned recommendation, means that the boiler is unsuitable for further service, as the condition of the rest of the boiler structure

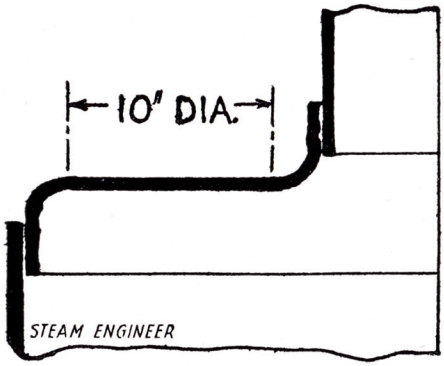

Fig. 9.— Flat firebox crown corrosion

is invariably similar and the expense of the repair cannot be justified financially.

When a boiler is heavily fired the firebox crown-plate is very likely to develop grooving defects. Whether the crown is of the flat or the dished type the maximum stresses obtained in the vicinity of the junctions with the firebox sides and uptake, and the flange knuckles work under conditions favourable to the formation of pitting, as illustrated in Fig. 10. The pittings gradually extend until they coalesce, and practically the entire circumference at the plate corners is reduced in thickness by a groove of from $\frac{1}{4}$ to 1-in. wide. Sometimes the grooving assumes the detached form, but at the uptake radius a more or less continuous groove is often the precursor of a hair fracture right through the plate. A fracture of

this type may also develop if the crown-plate has been maltreated during the flanging process, and it is very difficult to detect owing to the inaccessibility of the fire side of the plate. When a fracture is suspected, the root of the flanged part should be drilled and the bore of the hole examined to see if a fracture exists.

In the case of boilers large enough to have a full-sized manhole permitting internal access, grooving defects in the firebox crown can often be repaired by V-ing and electrically welding the groove. This method is very suitable for fractures in the uptake flange, but grooving of the firebox flange to any appreciable depth usually makes it necessary to fit a new crown-plate. In small boilers of which the condition is good enough to warrant the expense, access for V-ing and welding uptake grooving can sometimes be effected by cutting a suitable size of opening at the

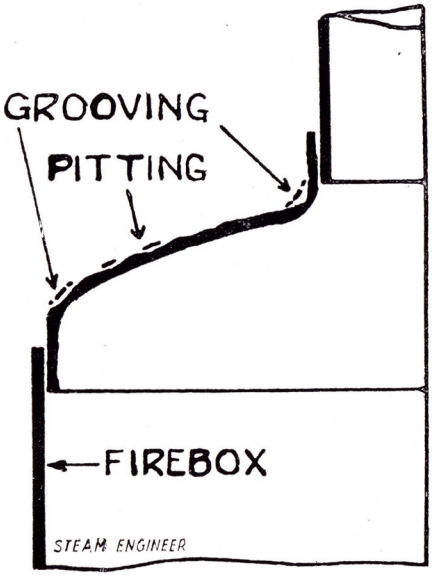

Fig. 10.—Firebox crown-plate defects

opposite end of the diameter on which the original manhole is located. When the repair has been completed the opening must be reinforced by the usual compensating ring, and a conventional form of manhole door fitted.

All but the smallest sizes of vertical boilers have one or more crosstubes arranged in the firebox. The tubes are of solid-drawn or butt-welded construction, and vary from 5 to 12in. in dia. by about $\frac{3}{8}$-in. thickness; being attached to the firebox sides by means of electrically-welded or riveted flanged seams. They are liable to a certain amount of wasting from the action of the fire, but the most severely attacked region is over the upper circumference where soot accumulates during standing periods. This external corrosion is greatly increased if no chimney

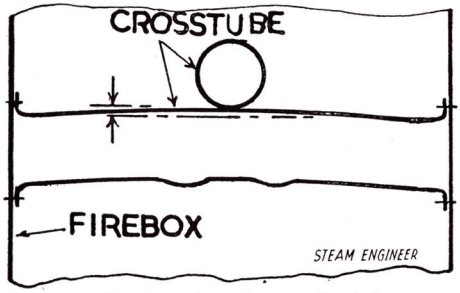

Fig. 11.—Over-heated crosstube defects

cover is provided and rain drips down on to the soot.

Crosstubes are difficult to clean internally when hard scale deposits have been allowed to build up, and neglect of these surfaces gives rise to the danger of over-heating. The last-mentioned may cause the longitudinal seam to split open, or, if the crosstube flanges have been maltreated during manufacture, a fine crack may develop in the root of the flange. Fig. 11 shows an example of a lower crosstube that became over-heated due to heavy scale deposits. The tube was $8\frac{1}{2}$-in. outside diameter by $\frac{3}{8}$-in. thick, and scale was allowed to deposit until a thickness of $\frac{1}{2}$in. to $\frac{3}{4}$in. was reached. During normal working the tube "hogged" until restrained by the crosstube immediately above it, and the over-heating continued until two bulges formed, as indicated in the sketch. One of the bulges finally ruptured and extinguished the fire. If the crosstube had not been of solid-drawn construction it is possible that the tube would have split and have caused a serious accident.

The least serious defect arising from over-heating of a crosstube is the formation of a narrow groove in the firebox plate, adjacent to the periphery of the flange, caused by straining the seam and subsequent leakage. A defect of this nature can often be remedied by a light seal-

welding, if the affected area is fully accessible. When a crosstube hogs or splits as described above, it must be removed and a new tube fitted, or the firebox openings must be blanked off. To fit a new tube tightly and correctly, particularly if it is the second or third tube from the bottom, necessitates the removal of the firebox from the shell. This is an expensive business and is not always financially justifiable unless the boiler is comparatively new, so that frequently a situation like this is dealt with by removing the tube and blanking the openings. One way of doing the latter is to cut circular steel plates having the same thickness as the firebox, and to secure them in place by means of tap rivets as illustrated in Fig. 12A. The rivets should be not less than $\frac{3}{4}$-in. dia., and sufficient of them must be used to keep the stress due to the load at the pitch circle down to about 5,000 lb. per sq. in. The rivet threads have a fine pitch and are screwed on a slight taper, and when they are tightened in place the square projection is cut off and the countersunk head is well caulked. Bolts or studs with nuts are unsuitable for this form of repair as the bolt heads or nuts are soon burnt off in service.

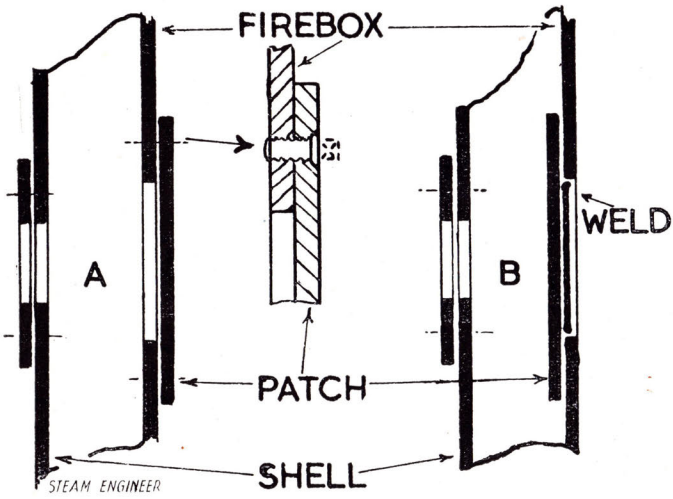

Fig. 12.—Blanking off crosstube opening in firebox

If a good welding operator is available, the repair shown in Fig. 12B can be applied. In this case the blank is situated on the water side of the plate, and is welded to the firebox plate at the bore of the crosstube opening and at the crosstube flange rivet holes. Obviously, every care must be taken to ensure that the blank is central

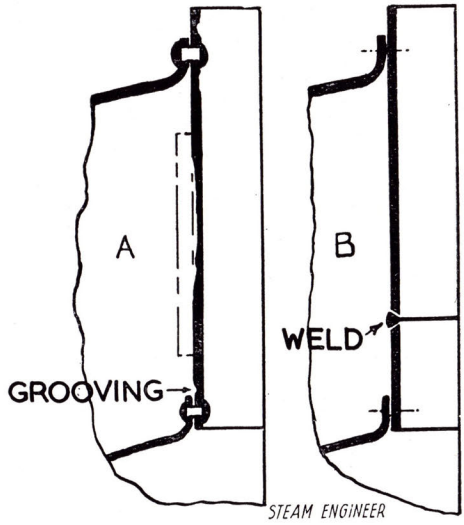

Fig. 13.— Uptake defects and repairs

with the crosstube opening before welding is applied, and it must also be held firmly in place until secured to the firebox wall.

The uptake of a vertical boiler is also likely to develop a number of characteristic defects, particularly if the boiler is hard worked. The most common commences as isolated pitting of the area above and below the water level, and the corrosion gradually extends until the surface is more or less generally wasted over about 6 in. to 9 in., as illustrated in Fig. 13A. This is sometimes accompanied by smooth wasting on the fire side, and estimates of the remaining thickness can be made at inspections by the use of a straight-edge, and by observing if the metal in close proximity to the rivet heads on the fire side stands above the rest of the plate

surface. If there is any doubt as to the remaining thickness—it is sometimes a little difficult to decide the exact depth of the wasting by visual methods—a drill test should be applied, but usually it is advisable to build up the wasted area by electric welding deposits on the water side before it reaches the doubtful stage. In small boilers, internal access for welding is not always possible, and then the only course is to withdraw the firebox and fit a new uptake, or adopt the expedient already described in connection with firebox grooving defects.

The official rule for the safe working pressure of a new uptake not less than $\frac{3}{8}$-in. thick is $p = 100\ (t - 2)/D$; where t is in thirty-seconds of an inch and D is the external diameter of the uptake in inches. Take an uptake that was originally $\frac{3}{8}$-in. thick and 10-in. external diameter and we find that $p = 100\ (12 - 2)/10 = 100$ lb. per sq. in. Strictly speaking, the rule does not apply for thicknesses below $\frac{3}{8}$ in., but using it for a reduction in thickness to $\frac{1}{4}$ in., the safe working pressure comes to 60 lb. per sq. in. Now the formula is of the type $pd = 2$ ft. where t is in inches and f is the stress in lb. per sq. in., the other variables being as before. The factor 2 allowed in the official formula for corrosive effects, etc., is deleted and by equating the expressions we find that the stress assumed in the official formula is, about 1,600 lb. per sq. in. If, therefore we allow a stress of, say, 1,500 lb. per sq. in. in the corroded uptake and use the rule $pd = 2$ ft., we arrive at a safe working pressure of 75 lb. per sq. in. Any British engineering insurance company would be prepared to certify the boiler for service at this higher pressure.

Uptakes also groove at the junction with the lap edge of the firebox crown (see Fig. 13A), and if caught in time the defect can be repaired by welding. In the author's opinion, if a boiler is large enough to have a manhole permitting bodily entry into its upper portion, there should never be any need to fit a new uptake during the useful life of the boiler, as any defects should be observed and repaired before they become serious. It occasionally happens, however, that a new uptake is essential, and considerable expense must be incurred in dismantling the boiler for that purpose. In such circumstances the bottom 4 or 5 in. of the uptake should be carefully cleaned and examined, and if the metal is in good condition it may be possible to cut out the badly-wasted upper portion of the uptake and fit in a new length as shown in Fig. 13B. The butt-ends of the new and old portions are chamfered and butt-welded together as indicated, and the cost of removing the firebox and putting it back again is saved. But it is a method that can be employed only in large boilers allowing bodily access above the firebox so that the welding operator is able to move right round inside. It must not be used in smaller boilers where the operator would have to reach round to the back of the uptake while welding. This method of repair is applicable when the top end of the uptake at the shell crown seam has become corroded, as in Fig. 13A, due to straining of the seam and leakage, but if noticed in time, a satisfactory repair can often be made by welding the area and fitting new rivets.

UPTAKE CONNECTION DEFECTS AND REPAIRS—MOUNTING BLOCK GROOVING—SHELL CROWN-PLATE GROOVING—REPAIRS TO FRACTURED SHELL CROWN-PLATES—LONGITUDINAL SEAM DEFECTS—BLOW-OFF TAP DEFECTS AND REPAIRS—CORROSION AT MUD-HOLE

A DEFECTIVE uptake having a shell crown connection similar to that shown in Fig. 14A can be removed readily by cutting an opening in the shell crown sufficiently large to allow the passage of the uptake flange. A new uptake can thus be fitted without having to take out the firebox, and the method of closing the shell crown opening is indicated in Fig. 14B. The annular patch is of the same thickness as the shell crown-plate, and for large openings it is advantageous to double-rivet the patch to prevent subsequent straining and leakage.

In Fig. 14, C and D, are shown alternative methods of connecting an uptake at the top and bottom ends, respectively, and they are forms used mostly in the older type of vertical boiler. That in C may leak due to working of the seam as a result of the

densation from a leaking valve gland trickles down the sides of the mounting it collects at the junction of the valve mounting pad with the shell crown. Furthermore, the mounting pad forms an area of local stiffness in the crown, so that the plate in the immediate vicinity moves up and down a little during the normal expansion and contraction of the crown-plate. This, and the presence of moisture from leaking glands and joints eventually causes the formation of a groove around the periphery of the flange, as shown in Fig. 16A, and also in general corrosion of the surrounding plate. Insulating material should on this account be cut about $\frac{3}{4}$-in. around all mountings and compensating rings to facilitate inspection of the plate, and when the form of grooving under consideration is detected, it can usually be repaired by welding. If, however, only some $\frac{3}{16}$ to $\frac{1}{8}$-in. of metal remains at the bottom of the groove the application of welding may hasten the subsequent fracture of the plate, and it is then preferable to cut out the grooved area and fit a suitable riveted patch. Alternatively, a larger diameter mounting block can be fitted. Occasionally in the case of dished crown-plates the mounting seatings are formed by pressing flats in the plate. Poor workmanship may initiate cracking of the pressed part in service, as indicated at X in Fig. 16B. If observed in time the fracture can often be V-d and welded, and a first-class job can be

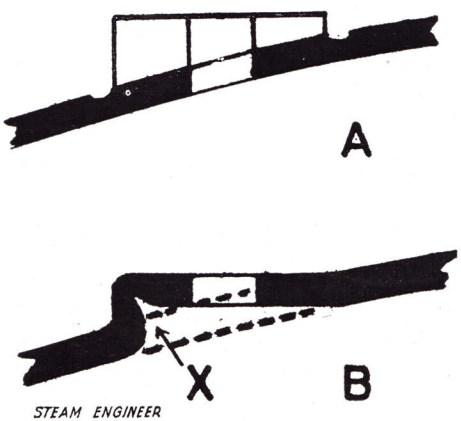

Fig. 16.—Mounting block grooving

made of it if both sides of the plate can be thus treated.

The region of greatest stress in crown-plates is in the root of the radius where the plate is flanged to form the shell connection, and this is also the part most liable to

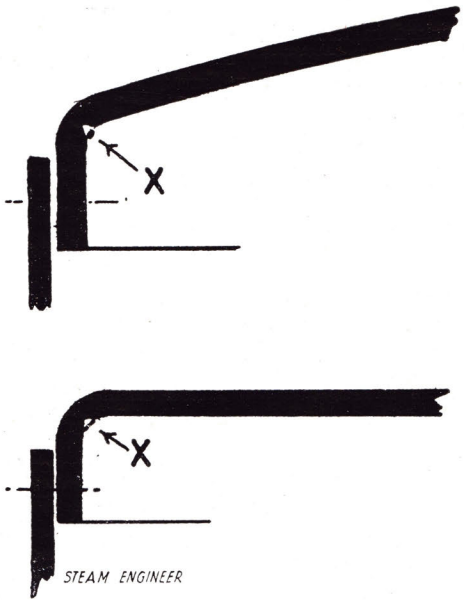

Fig. 17.—Shell crown-plate grooving

manufacturing defects. Should the plate have been flanged at the wrong temperature, severe stresses are locked up in the metal, and it is not unknown for a flanged end plate to fracture partially or wholly at the flange knuckle in service. Even when the end plate has been properly worked during manufacture there is the danger of grooving resulting from the bellows movement of the plate under ordinary working conditions. The skin of the metal may be broken in places, thus forming starting points for minute fractures which extend through mechanical and corrosive action to the form shown in Fig. 17 at X. Undetected "fine" grooving in this locality may finally penetrate the plate, and when penetration occurs over the major part of the circumference the fitting of a new end plate is probably the most satisfactory repair. Short detached lengths of grooving can, of course, be treated by cleaning out the grooving to a V and electrically welding it.

By way of example, an interesting repair of a fractured crown-plate is illustrated in Fig. 18. The plate in question failed suddenly in service as indicated, and only the fact that it was held in place by stays prevented a serious explosion. For a

number of reasons it was not possible to fit a new crown-plate, so a repair was effected by patching; the boiler, fortunately, being large enough to permit full internal access for riveting, etc. The repair has given trouble-free service for many years, and is likely to outlast the useful life of the boiler.

Lap fractures in the shell flanges of crown-plates are fairly common, especially when the flanges have been formed by hand as in some of the older boilers, but they are of no great importance unless they tend to run into the solid plate beyond the rivet hole. Fractures in the longitudinal seam of the shell itself, however, must be viewed with greater concern, particularly if the seam is of the usual lap-riveted type. During manufacture it might happen that the ends of the plate have been hammered into shape by hand (some plate-rolling machines leave the ends of the plates rather flat), and the work-hardened localities form a starting point for fractures, the propagation of which is assisted by subsequent hardening of the metal during the riveting process. Similar remarks apply to butt seams with cover plates, in this instance the damage usually being done by drawing up flat or poorly-shaped cover-plates against the round of the shell by riveting pressure. Lap seams, however, predominate in the ordinary sizes of vertical boilers, and when under pressure they have a tendency to straighten out, as shown in Fig. 19. The action may in certain circumstances severely stress the plate at the lap edges, A and B, or result in inter-rivet hole fractures. In old boilers in which corrosive or slightly corrosive water has been used, it is not uncommon to find a broad groove of corrosion of appreciable depth in detached lengths or even along the full length of the seam at A. There are instances on record where the bending forces acting on an already work-hardened plate have caused a fracture through the full depth of the plate along the full length of the seam. When this has occurred there has usually been some warning given in the form of small detached fractures, and the only remedy in such circumstances is to remove the firebox, examine the seam, and then crop out the strip of plate containing the seam and fracture. A new strip of plate, having longitudinal seams of suitable strength, is then riveted in place. Most boiler owners, however, would rightly prefer to purchase a new boiler rather than incur the expense of this repair.

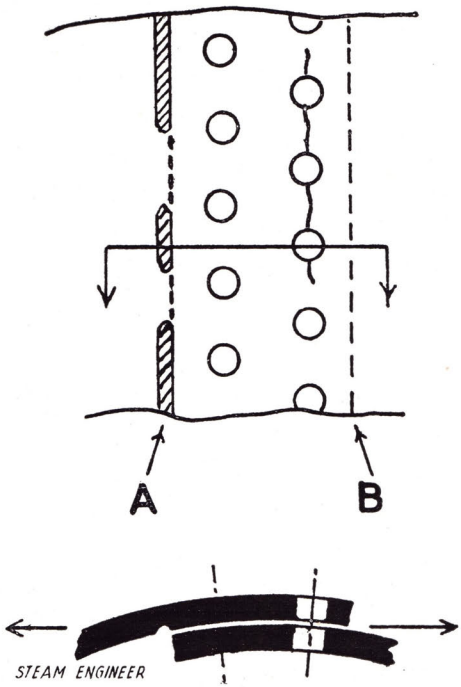

Fig. 19.—Shell longitudinal seam defects

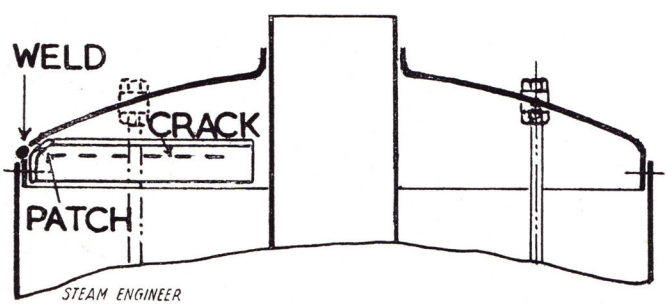

Fig. 18.—Repair to fractured shell crown-plate

in Fig. 21, and where persistent leakage has been allowed the edges of the plate and cover are slowly wasted away until there is a wide opening between the cover spigot and the aperture into which it fits (see A in Fig. 21). It is authoritatively recommended that the total clearance around the spigot should not exceed 3/16 in., but instances are often encountered in practice where the clearance amounts to ½ in. or more. The danger is that the joint ring will be forced off its seating face and be blown through the excessive opening, and numerous fatal accidents have ensued from defects of this sort. Examination of these parts is necessary at frequent intervals, and any undue clearance can be reduced by building up the cover spigot and the plate edges forming the periphery of the opening. Leakage at these openings is often accompanied by corrosion of the lower half of the compensating ring, but this can also be repaired by electric welding, unless the ring is wasted nearly through its full thickness. It is then necessary to fit a new ring, secured by tap rivets, and, possibly, seal-welded at the edges. Cover studs tend to waste in the shanks in the above conditions, as indicated at B in Fig. 21, and they must be renewed from time to time.

ASHPIT CORROSION IN CRANE BOILERS—CORROSION PROBLEMS WITH VERTICAL MULTITUBULAR BOILERS

ANY leakages from mountings, etc., generally flow into the boiler ashpit, which is normally constructed by extending the shell plates some 12 in. to 15 in. below the firebox bottom seam. The ashpit is cleaned out at very irregular intervals, with the result that the acids remaining in the ashes are dissolved out and quickly corrode the metal wall. A piece of ⅜-in. plate can be reduced to paper thickness by this action in about two years. Now the ashpit also serves as a support for the boiler, and when the latter is mounted on a rapidly moving crane or grab it must withstand considerable loads. Any corrosion of the ashpit extension should, therefore, be viewed seriously and a repair effected without delay, by bolting, riveting or welding-in a new piece of plate. The incidence of such corrosion can, of course, be almost indefinitely postponed by thoroughly cleaning out the ashpit at the end of each day's work and by eliminating all sources of water leakage into the ashpit.

While on the subject of crane boilers, it should be mentioned that the commonly adopted arrangement of the coal bunker shown in Fig. 22 can result in heavy corrosion of the pressure-bearing part of the shell, as well as of the ashpit extension. A steel box, B, is fitted for the storage of a suitable quantity of coal, and a protecting plate, A, is provided so that the coal does not rest against the boiler shell. In throwing coal through the fire hole, C, however, dust and small fragments of coal drop into the narrow space between A and the shell. The accumulation absorbs any moisture available (the water tank is usually in the immediate vicinity), and if undisturbed for two or three years may very seriously corrode the surface of the shell plate. The bunker and protecting plate must, therefore, be removed at each annual examination and the exposed parts coated with a preservative paint. The plate, A, can also be flanged to fit closely to the boiler shell, and so prevent the ingress of a lot of small pieces.

There is always the possibility that external corrosion of the lower part of the shell may coincide with the already mentioned internal corrosion at the bottom of the annular space. This form of corrosion occurs when soft sludge is allowed to lie undisturbed for long periods, so that the pitting has time to assume the honeycomb or confluent form. It can usually be observed by looking through an adjacent mud-hole, or by inserting the hand through the mud-hole and moving the finger tips over the surface of the plate. When a boiler shell becomes badly reduced in this manner the only really satisfactory repair is to cut out the corroded portion and fit a patch secured partly by the firebox bottom circumferential seam and partly by suitable tap rivets. A D-shaped or semicircular patch is the best, allowing double tap riveting to be applied; but, generally,

the condition of the rest of the boiler does not justify the expense of such a repair, and it is frequently cheaper to purchase a new boiler.

In small steam plants somewhat higher thermal efficiency and more rapid steam raising can be attained by using a boiler of the type illustrated in Fig. 23. The example shown is a design for gas firing, but externally fired solid-fuel boilers are also made by extending the shell below the bottom tube plate to form a firebox.

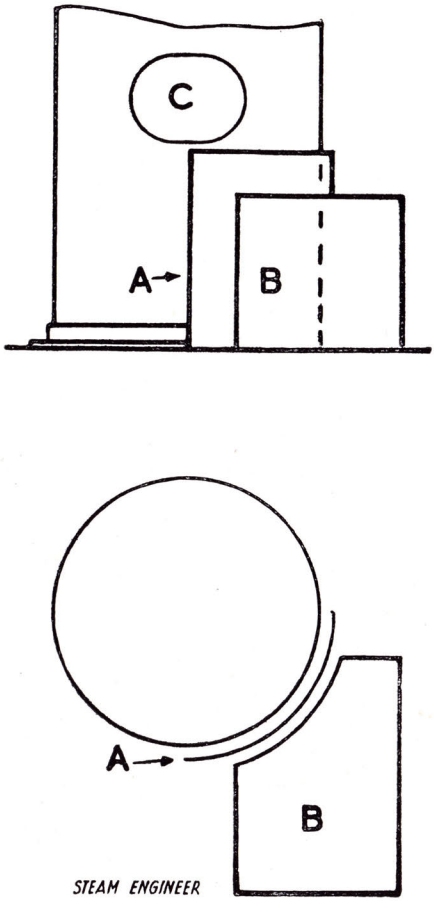

Fig. 22.—Corrosion of crane boiler at coal bunker

Internally, the simple construction of this boiler lessens the possibility of defects other than those due to the class of feed-water used. The danger of scale deposits will be discussed more fully later, but this design should be blown down at frequent intervals to minimise it, and the interior should be cleaned as thoroughly as the limited means of access allow. With an inwardly dished bottom tube plate sludge should not be permitted to collect at the junction of the tube plate and shell, since

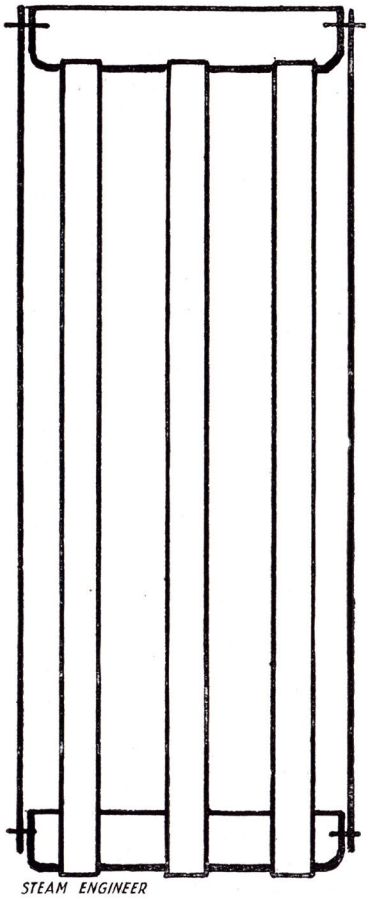

Fig. 23.—Gas-fired vertical multitubular boiler

this sets up local corrosion and may eventually cause the shell to groove through. The nearness of the tubes to the shell prevents close examination of the bottom tube plate and other internal parts, but a reasonable estimate of their condition can usually be made by the use of a small mirror and light inside the boiler. After a number of years of service the tubes may be found to be pitted about the working water-level, the shell being similarly attacked. The area about the water-level is inaccessible for hammer test-

ing, and it is, therefore, advisable to supplement internal examinations by hydraulic tests about once in every three years or so. Such tests are likely to disclose any seriously pitted tubes, leaking tube expansions or fractured tube plates. Any abuse of a boiler of this type nearly always results in the development of bottom tube-plate defects.

In the larger sizes of vertical boilers with vertical smoke tubes, an internal firebox is provided, and the evaporative capacity may be as high as 9,000 lb. per hour. In American practice, capacities greater than this are in regular service. A view of a representative vertical smoke-tube boiler is shown in Fig. 24, and it will be seen that the firebox is much shorter than the usual crosstube boiler firebox, being 1 to 1.25 diameters in British practice. The flat tube plate which forms the crown of the tubular boiler firebox is subjected to the full radiant heat intensity of the fire, so that, if an excessive combustion rate obtains, very high temperatures develop in the upper part of the firebox. The working conditions are worsened by the poor water circulation over the bottom tube plate and by the scale deposits accumulating on its flat surface. The smoke tubes are thin relative to the tube-plate thickness, and consequently expand and contract at a greater rate. In the course of time a certain number of tube-end leakages can be expected, but the appearance of such defects is hastened if the boiler is heavily fired and large volumes of cold air are frequently allowed to enter the firebox. The air cools the tube ends and causes them to shrink in the tube holes until a minute but permanent annulus forms and allows water to leak out of the boiler.

In a reasonably cared-for boiler the occasional application of an expanding tool is usually sufficient to stop the leakage; but when the boiler is consistently over-fired frequent re-expanding may become necessary. This in time hardens the tube end until it finally splits, and it also gives rise to severe stresses in the tube-plate metal about the tube hole. Undue stressing of the tube plate by mechanical means may be accentuated by thermal stresses arising from overheating. The plate is necessarily located at the lower part of the boiler in way of the fire, and when hard water is used the deposits collect on the tube plate, thus hindering the free passage of heat. The corresponding rise in temperature of the steel tube plate may be sufficient to reduce its strength, and the smallest section, *i.e.*, the inter-tube hole ligaments, fractures. Sometimes the tube plate fails across a full diameter, so that a new plate is required; but when only one or two ligaments are cracked it is usually possible to repair by welding.

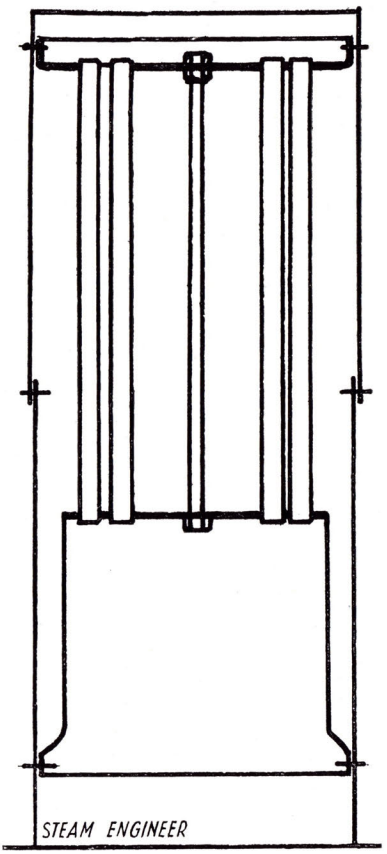

Fig. 24.—Internally fired vertical multitubular boiler

The lower ends of the smoke tubes are frequently beaded over and ferruled to prolong their useful life; but sometimes the tube holes become distorted by repeated expanding. In moderate cases of distortion it is possible to effect a cure by fitting a new tube in each hole and inserting a thin copper ferrule between the exterior of the tube and the interior of the tube

hole. The ordinary ferrules in the bore of the tubes occasionally become loose and fall out, and they should be replaced as soon as possible after their displacement has been noted. Lower tube-end leakages can also be caused by an accumulation of scale on the water side; the tendency being for deposits to build up round the tube necks. The defect can be minimised by frequent cleaning, thus preventing the local overheating that sets up the leakages, but neglect of this precaution can halve the normal tube life.

The rest of the firebox is liable to suffer from the defects already described in connection with the vertical crosstube boiler, *i.e.*, pitting of the sides, fire-level wastage and bulging, corrosion of the firebox foundation ring, etc., and can be similarly repaired, so that discussion of this part would be redundant. A peculiarity of the vertical tubular boiler, analogous to the water-level wastage of the uptake, is the pitting and wasting of the smoke tubes that takes place over 3 in. to 6 in. about the normal working water-level. Frequently this corrosion is difficult to detect because of its height above the manhole (usually arranged at firebox crown level), but much can be accomplished with the aid of a mirror and light. It is often possible to insert the arm inside the boiler and tap the suspected tubes lightly with a hammer, and any dangerously thinned tubes will indent or perforate under this test. With reasonably good working conditions, a tube of this type should have a useful working life of about 10 years, but a minor degree of water-level wastage may become apparent after only four or five years of service.

The indentation or perforation of a single tube indicates that others may be similarly affected, and to confirm this some 25 per cent of the inaccessible inner tubes should be removed for examination. If these also are badly thinned, a complete set of new tubes should be fitted, since it is false economy to renew old tubes as they perforate in service. In a large boiler the renewal of the tubes is an expensive matter, particularly when perhaps only some 6 in. of the tube length is badly corroded, and in such circumstances it is permissible to cut away the upper portion of each plain tube containing the wasted area and butt weld a new end to the rest of the tube. Before carrying out the repair, however, it must be determined conclusively that the tube plates are adequately supported against pressure, irrespective of the effect of the plain tubes, and no stay tube should be thus repaired.

As mentioned above, the upper portions of multitubular boiler fireboxes are subjected to very high temperatures, and consequently, after a number of years of use, this part of the boiler becomes more or less pitted on the water side. The plate must, therefore, be carefully cleaned at frequent intervals to assist the passage of heat and to facilitate observation of the defects. In badly forced boilers, the pittings become more numerous, and assume a form of irregular wasting which may lead to the necessity for a new tube plate. Isolated pittings can be filled with electric welding deposit, but the use of this remedy is limited by the restricted provision for internal access.

The strength of a tube plate of this type depends on the strength of the plate itself and on the strength of the stays employed to support it. As regards the tube plate, it must also be thick enough to provide an adequate landing for the plain tubes expanded into it, and one rule specifies that the thickness of a steel tube plate shall be not less than $D/8 + 0.2$ in. and the cross-section not less than $0.17D + 0.025$ sq. in.; where D is the tube-hole diameter in inches. The British Standards Specification for this class of boiler requires that the tube plate shall be not less than $\frac{3}{8}$ in. thick for tube holes of 2 in. diameter and under, and not less than $\frac{1}{2}$ in. thick when tube holes of over 2 in. diameter are necessary. In the case of boilers designed as shown in Fig. 23 the tube plates are supported wholly by the tubes where they are expanded into each tube plate, and for steel plates the following rule can be used to determine the safe working pressure: $P = 470 \times D/A$; where P is the pressure in pounds per sq. in., D is the tube-hole diameter in inches, and A is the area in sq. in. supported by one tube. When the thickness of the tube plate is less than that required by the first rule above, the safe working pressure obtained by using the second rule must be reduced proportionately. Another requirement is that the tubes shall be beaded over or bell-mouthed at the firebox end.

CORROSION OF UPPER TUBE-PLATES IN MULTITUBULAR BOILERS—GROOVING AT SHELL MOUNTINGS OF VERTICAL MULTITUBULAR BOILERS—FRACTURES IN SMOKE-TUBE BOILER UPTAKES—REPAIRING TUBE-PLATE FRACTURES

THE conventional method of supporting the tube-plates of a vertical multitubular boiler is to fit one or more bar stays to tie the plates together, or to provide a number of stay tubes screwed into the plates at each end and expanded. The bar stays are fitted in the smaller sizes of boiler, and, apart from becoming reduced in diameter at the water-level by corrosion, as in the case of the smoke-tubes, they give very little trouble. It should be remarked, however, that the strength of the stay varies as the square of its diameter, so that if a $1\frac{1}{4}$-in. diameter stay is reduced to, say, $\frac{7}{8}$ in., its strength is only 49 per cent. of the original, and the stress in it is increased in the proportion of 2.02 : 1. In the larger boilers, staying is effected by means of stay tubes suitably disposed over the plate, and the cross-sectional area of the stay tubes must be such that the entire load due to steam pressure can be sustained by them without the stress at the bottom of the threads exceeding 7,500 lb. per sq. in. The official rule for the safe working pressure of a firebox tube-plate of this type is $60\ (t - 1)^2 / P^2$; where P is the mean pitch of the stay tubes—*i.e.*, one-quarter of the sum of the four sides of any quadrilateral bounded by four adjacent tubes and t is the plate thickness in 32nds of an inch. Thus, when a tube-plate is generally reduced by corrosion, its new safe working pressure can be determined once the average thickness has been obtained by drill tests.

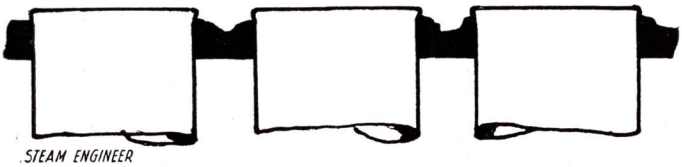

Fig. 25.—Corrosion of vertical multitubular boiler upper tube-plate.

At the top tube-plate (or shell crown plate) the tube expansions occasionally develop leakages, and if these are neglected they may cause serious corrosion of the metal around the tube holes. The construction of the smoke-box provided at this end of the boiler to carry away the products of combustion is such that an appreciable amount of soot and dust is precipitated on to the tube-plate. The fine powder absorbs the moisture from the tube ends, and corrosion of the form indicated in Fig. 25 results. The amount of wasting that can be permitted depends on the original strength of the tube-plate, determined as described above, but wasting to a depth of $\frac{3}{16}$ to $\frac{1}{4}$ in. can usually be allowed in a plate originally $\frac{5}{8}$ in. thick. When this limit has been reached, the corroded areas must be built up by electric welding. If the condition of the smoke-tubes makes it probable that they are likely to give further service for a few years, it is sometimes advantageous to seal-weld the peripheries where the tubes project through the plate. At times, however, the progress of the wasting may be very rapid between the annual thorough examinations, so that the plate thickness is much reduced. In small boilers it is then advisable to remove the old crownplate and fit a new one, provided that the remainder of the boiler is in good order, thus justifying the expense. Where a large boiler is concerned the provision of a new flanged crown plate is a costly matter; but if the tubes are in a low condition and are likely to be replaced in a short time, it may be less expensive to carry out a repair of the type illustrated in Fig. 26A, so saving the cost of flanging a plate. The method shown entails the removal of the tubes and the cutting out of a circular opening clear of the outer row of tube holes, sufficient width of flat surface being left to form a seam. A circular plate of suitable diameter and with a thickness equal to that of the original plate is made and drilled to correspond with the original tube-hole pitches. When prepared, the new crown plate is secured by single-riveting it to the flanged portion of the old crown plate. The tubes are then fitted as before; but it will be seen that this method demands new tubes with, in comparison with the old ones, an

additional length equal to the thickness of the new crown plate.

In certain circumstances a vertical smoke-tube boiler can be satisfactorily repaired by butt-welding a new flat portion into the top tube-plate, thus saving the expense of new tubes, the drilling of rivet holes, etc. When the steam load on the top tube-plate is fully carried by stays subjected to a normal intensity of stress, there can be no serious objection to this method of repair, but it implies that the welded seam is made by a skilled operator. Moreover, the method should be used only when the welded seam can be formed from both sides of the plate, so that no sharp angles, etc., are left to initiate fractures. Since under these conditions the tube-plate area is adequately supported by the stays, any subsequent failure of the weld in service can result only in a very slight displacement of the plate and a correspondingly restricted rush

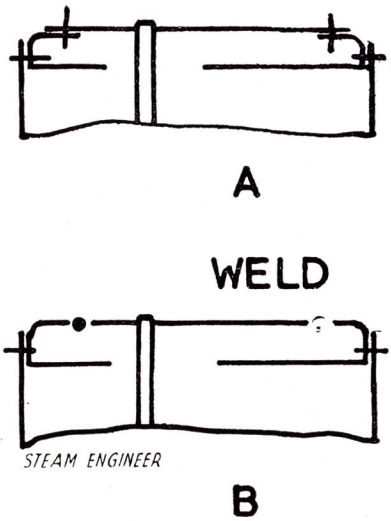

Fig. 26.—Repair of corroded upper tube-plate.

of steam. This method is illustrated in Fig. 26B.

In the smaller smoke-tube boilers it is customary to mount the safety-valve on a short stand-pipe to bring it clear of the smoke-box casing. The corrosive nature of the fire-side deposits in the casing also affects the pipe, and it may become generally corroded, or, as is more usual, it may groove deeply where it is screwed into the tube-plate. The groove will eventually penetrate the pipe, and this fitting should therefore be examined from time to time and renewed when its thickness approaches 50 per cent. of the original.

Another feature peculiar to the larger

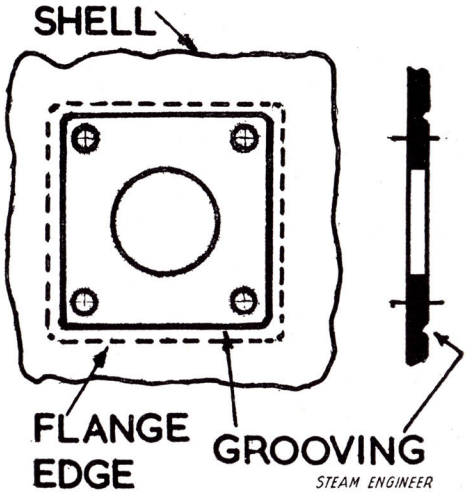

Fig. 27.—Grooving at shell mountings of vertical multitubular boiler.

sizes of smoke-tube boiler is the corrosive grooving that occurs at the mounting flanges. The safety and steam junction valves are usually fitted directly on to the shell, as near to the top tube-plate seam as possible, and because of slight leakages and the expansive movements of the boiler a continuous groove develops at the periphery of the joint, just within the edges of the flange, as indicated in Fig. 27. The defect cannot be seen unless the mounting is removed, and in some instances it progresses until the plate is nearly penetrated. When this stage has been reached, the only remedy is to cut out the area of plate containing the grooving and rivet in a new piece; a procedure which generally necessitates the removal of the tubes and the top tube-plate. If, however, the mounting is taken off at intervals of from three to five years the grooving can be noted in its early stages, and any loss of shell plate thickness can be restored by a run of electric welding.

Apart from the above-described defects, the shell of the vertical smoke-tube boiler is liable to wear and tear similar to that already mentioned when discussing vertical cross-tube boilers, and any defects should receive similar treatment.

One of the best known designs of vertical

smoke-tube boiler in which the smoke tubes are horizontal, is the Cochran, and the experience of the author is that, if given reasonable care, the Cochran boiler is one of the most satisfactory and efficient vertical multitubular boilers available. The hemispherical firebox is pressed from a solid plate, and an examination of a sectional view shows that none of the riveted seams connecting the firebox to the shell is directly exposed to the action of flame. This method of construction eliminates many of the typical firebox defects already cited, and lends itself to sustained trouble-free operation. Improper operation, however, may lead to a number of defects, and of these may be mentioned the usual bulging and cracking at the fire level, due to an accumulation of scale and sediment at the bottom of the foundation ring.

Occasionally when a boiler of this type is consistently forced and scale is allowed to collect on the water side of the firebox uptake leading to the dry combustion chamber, leakage may be experienced and eventually the metal of the ring may become fatigued. Fractures may develop in a longitudinal or circular direction, as indicated in Fig. 28, but, when small, can be satisfactorily repaired by V-ing and electrically welding. A frequent recurrence of fractures in the uptake portion is an indication that this part of the boiler is due for replacement, and a new ring should be fitted without delay. Neglect of a defective uptake has in the past resulted in serious damage to at least one boiler, due to unobserved leakage through a fracture and the subsequent lowering of the water-level below the safety line.

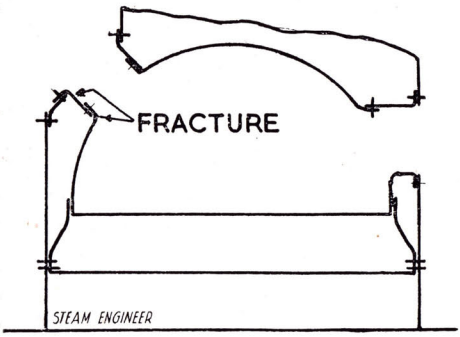

Fig. 28.—Fracture in horizontal smoke-tube boiler uptake ring.

The smoke-tubes in this design are expanded into specially shaped front and back tube-plates; a proportion of the tubes being thicker than the remainder and screwed into the flat plates to serve as stays. Normally, the smoke-tubes give little trouble in service; but to ensure a continuance of this desirable state of affairs a reasonably pure feed water must be used, or the interior of the boiler must be cleaned at frequent intervals. After the firebox crown, the back tube-plate is subjected to the highest temperature on the fire side, and it must, therefore, be cooled as effectively as possible on the water side, to prevent overheating. Some of the scale-forming impurities in the feed water tend to deposit on the back tube-plate around the tube necks, where they are difficult to remove except by the use of hand scrapers. When this happens, the free passage of heat through the plate is hindered, and slight leakages may be started at the tube expansions. The occasional use of a tube expander is often sufficient to remedy the defect; but when a boiler of this type is worked for a year or more without an intermediate internal cleaning, the leakages will probably become frequent and heavy. The author is familiar with one boiler plant in which it took four years of hard work at frequent cleaning shut-downs to remove the last traces of heavy scale deposited during an almost uninterrupted run of nearly 15 months. This was in addition to a heavy repair bill for tube renewals and

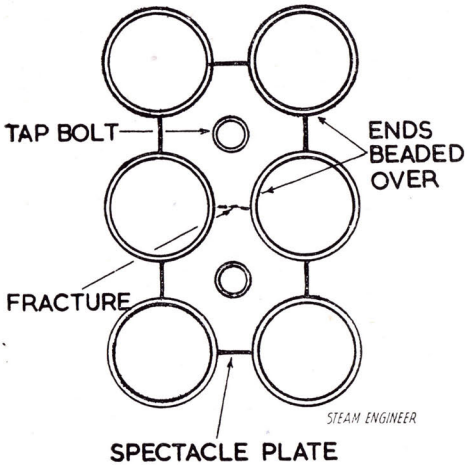

Fig. 29.—Alternative method of repairing tube-plate fracture.

tube-plate repairs attributable to the deposits.

It must be clearly understood that there is a limit to which successful tube expanding can be carried out, and once this limit has been reached no amount of subsequent expanding will have the slightest effect in regard to tightness. It merely hardens the material of the tube end, and may so stress the ligaments between the tube holes that fractures develop while the boiler is under steam. It is, therefore, sound policy to eliminate the conditions likely to result in tube leakages, and the elimination can be effected only by thoroughly cleaning the water side of the tube-plates at least every three months, according to the purity of the feed water used and the rating at which the boiler is regularly worked.

When past mal-operation has left a legacy of leaking tube ends it is sometimes permissible to adopt the expedient of lightly seal-welding them to the tube-plate. The repair should be applied only when the tubes are otherwise in good condition and are likely to have another five years or so of useful life. If the last requirement cannot be met, the whole of the defective tubes must be withdrawn and a new set fitted. In cases where heavy expanding or overheating has caused ligament fractures the fractures can be dealt with by V-ing them and electrically welding the grooves; but the work must be done by an experienced operator, because of the danger of distortion and the setting up of thermal stresses in the tube-plate more dangerous than the crack itself. As a welding outfit is not always readily available, the formerly common method of fitting a spectacle piece can be adopted, as shown in Fig. 29. An essential of a successful repair of this nature is that the spectacle piece should be well bedded on to the tube-plate, and when this is properly done the repair will probably remain as long as the boiler is required for service. Chain-studded repairs of these fractures are not desirable, as they merely seal the leakage without affording any support to the separated portions of the tube-plate. Moreover, the studs have been known to corrode at the threads over a period of years, and be blown out with dangerous consequences.

REPAIRING TUBE-PLATES ON HORIZONTAL MULTITUBULAR BOILERS—INSPECTING FIRE TUBES—CORROSION OF VERTICAL WATER-TUBE BOILER TUBE-PLATE

THE back tube-plates of horizontal multitubular boilers may become distorted or bulged in the tube area due to a low-water condition or to heavy scale accumulation on the water side. A low-water mishap usually results in distortion of the "shelf" above the tube-plate, but in a serious case the upper portion of the tube-plate bulges outwards. Scale accumulations, on the other hand, more often cause bulges over the lower dart of the tube-plate, as shown in Fig. 30A, and the deformation may be sufficient to fracture the tube-hole ligaments and make it impossible to fit new tubes into the distorted holes. A repair to the plate can be made, of course, by cutting out the affected area and riveting on a suitable patch, but it usually means the elimination of one or more tubes, and it introduces staying difficulties. A better method is indicated in Fig. 30B. The distorted area is cut out as before and a new piece of plate, having a thickness equal to that of the original tube-plate, is welded in place from both sides of the plate. In a repair of this type it is essential that the welded-in plate should be fully supported in case the weld fails, (it should be remembered that in this design of boiler the tube-plate is part of the shell), and in the example shown, safety is ensured by fitting an additional stay tube. Theoretically, this stay, and that originally fitted carry the steam load on the inserted plate, but actually a proportion of the load is carried by the adjacent stay tubes. A higher stress than usual can therefore be allowed in the patch stays, based on the area of the patch, the extra being as much as 50 per cent. Further support can be provided by beading-over the ends of the plain tubes in way of the inserted plate.

Internally, the incidence of corrosion in this type of boiler depends largely upon the class of feed water used, but severe local corrosion can take place when a boiler is regularly forced. The furnace crown is the part most affected in such circumstances, and the corrosion frequently

assumes the form of isolated pittings $\frac{1}{16}$ to $\frac{1}{8}$-in. deep by up to $\frac{1}{2}$-in. or $\frac{3}{4}$-in. dia. When a boiler stands idle for lengthy periods the furnace crown is sometimes generally reduced in thickness to a depth of $\frac{1}{16}$-in., and in consequence the isolated pittings tend to merge into the confluent form.

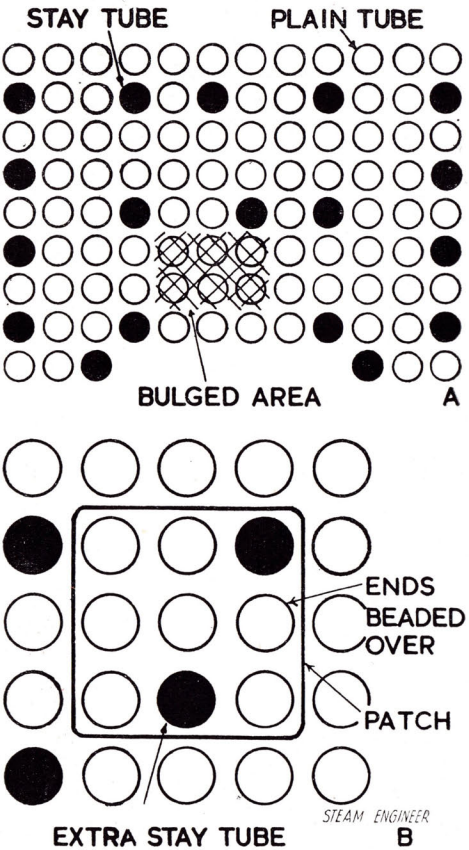

Fig. 30.—Repair of horizontal multitubular boiler bulged tube-plate.

Sludge should not be allowed to collect in the annular space about the lower part of the furnace as corrosion proceeds beneath the sludge, causing pitting and wasting of the ogee ring and adjacent metal. In very occasional circumstances a form of grooving corrosion may develop around the ogee ring, but this space is generally sufficiently accessible to allow the groove to be chipped out and the metal restored by electric welding.

The flat plate at the top of the combustion - chamber tube - plate may be attacked by isolated pittings, and sometimes the radius uniting it to the vertical part of the tube-plate develops grooving corrosion. This, too, may be repaired by electric welding.

Provided that no unusual troubles are experienced with the ends expanded into the tube-plates, smoke-tubes may have a working life of from 8 to 15 years. Under normal conditions of operation the temperature on the fire side is not excessive, and the horizontal tubes are not liable to the water-level corrosion characteristic of the vertical smoke-tube boiler. A certain amount of isolated pitting is, however, to be expected, and this may be accompanied by slight general corrosion externally and internally. The extent and severity of the pitting depends, of course, on the feed water and upon the condition of the tube surface when new, but smoke-tubes can be marked by isolated pittings to a greater depth than is generally appreciated. A tube having an initial thickness of $\frac{1}{8}$-in., for example, can be safely used for a limited period (until, say, new tubes can be obtained) when pitted up to $\frac{3}{32}$-in. deep, as long as the pitting is not more than about $\frac{1}{4}$ to $\frac{3}{8}$-in. dia. A tube thus marked should not be condemned out of hand (unless the boiler is to be worked for several months) but should be retained in service until new tubes are at hand. When the pittings have merged into irregular blotches considerably more care is required, and if necessary one or more tubes should be removed from each row for cutting through to ascertain if the rest of the tubes are similarly corroded.

General corrosion of the tubes inside the boiler can be observed by callipering those accessible for measurement, and in this respect particular attention should be paid to the ends near the tube-plates. The action of expanding the tubes, the concentration of stresses due to thermal expansion, etc., tend to thin the tube wall in these localities, and all accessible tubes should be hammer-tested during examinations. The condition of the ends of inaccessible tubes situated in the middle of the tube nest can be tested by using a " prodding " tool, as illustrated in Fig. 31, when standing in the combustion-chamber and uptake-casing spaces, respectively. Any badly wasted tube can be detected by this method and arrangements made for its removal.

The horizontal smoke-tube boiler calls for little further comment, except that it is

liable to develop external defects such as mounting and mud-hole leakages, as mentioned in connection with vertical cross-tube boilers. Most of the defects are due principally to ignorance and neglect on the part of the boiler operator, and are therefore avoidable troubles. There are, however, a few designs of horizontal smoke-tube boilers which employ a totally-immersed combustion-chamber instead of the dry type. In some of the older designs of wet-back boilers the vertical expansion of the combustion-chamber is such that the tubes at the front end plate are subjected to frequent stress reversals, and tend to fail by grooving through at the tube necks, particularly at the upper rows. The effect may be minimised by fitting heavier-gauge tubes, but a more satisfactory method is to provide an extra row of screwed stays to tie the combustion-chamber back to the boiler shell. The defect is one inherent in the design of the boiler and its results cannot be entirely eliminated, although modern forms of this construction appear to be giving satisfaction. Again, when the front tube-plate is formed in the shell, careful examination

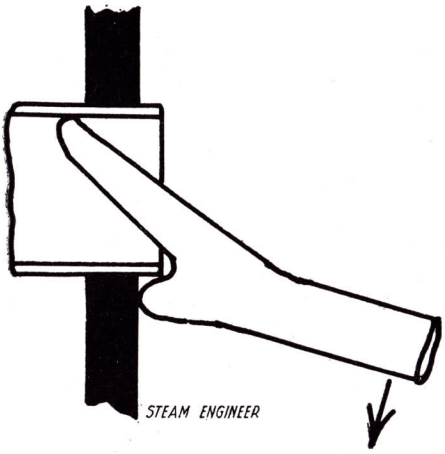

Fig. 31.—Prodding tool.

of the adjacent surfaces is necessary, because in some of the older types the tube-plate was of insufficient strength and distorted an appreciable amount when under pressure. Modern boilers of this type have been suitably reinforced to allow for the weakened cross-section at the tube holes.

The principal difference between the ordinary cross-tube boiler and the vertical water-tube boiler (now common in many factories) is that the few large-diameter tubes are replaced by numerous small-bore water-tubes. The lower part of the water-tube boiler is similar to the other, but the use of water-tubes make it necessary to provide tube-plates in the upper portion into which the horizontal tubes are expanded. The tubes are usually about 2 in. diameter, and the sub-division of the water flowing across the firebox, together

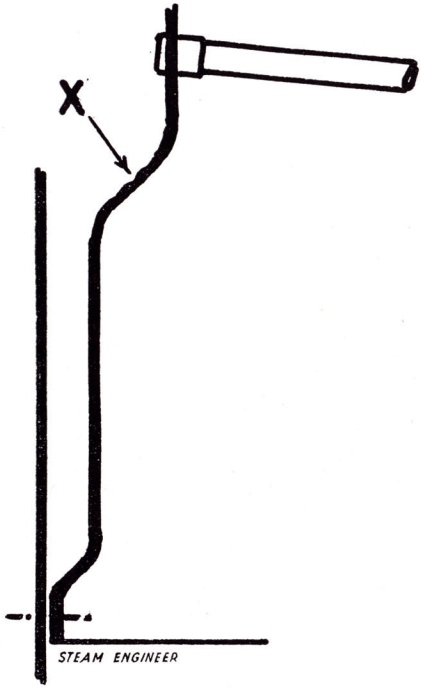

Fig. 32.—Corrosion of vertical water-tube boiler tube plate.

with the additional heat-absorbing surface arranged in the path of the gases, result in enhanced rates of evaporation. There is, therefore, a tendency for scale to accumulate inside the tubes when hard water is used, and unless the deposits are removed at regular intervals the water flow through the tubes—especially those in the lower rows—may be restricted or even stopped. When choking occurs it is only a question of time before the tube wall becomes overheated, and bulging and splitting of the tube may follow. It is therefore advisable to clean the tubes on the water side every

four weeks or so, according to the class of water being used.

Incidentally, the author has encountered one or two cases—they are extremely rare —when the tube-plate of a boiler of this type has fractured between the tube holes. The cause has nearly always been overheating resulting from heavy scale deposits on the tube-plate, but to make a really effective repair the fracture should be V-d and welded from both sides of the plate This means removing most of the tubes, so that it is obviously less expensive to check the amount of scale from time to time and see that it does not accumulate.

On the fire side, regular forcing of the boiler and accompanying high furnace temperatures may cause slight " hogging " of the tubes, but this is not a serious defect unless it exceeds about $\frac{1}{2}$-in. in a normal size firebox. Similarly, high furnace temperatures and too-frequent opening of the fire-door may start a number of tube-end leakages, and these parts should be carefully examined whenever the boiler is shut down for internal cleaning. The most serious factor is the accumulation of soot in the restricted inner-tube spaces, as the soot readily absorbs moisture and the released acids corrode the thin tube walls. The effect is most common in boilers that stand idle at intervals, and it is accelerated by rain dripping down the uptake. All the accessible tubes should be callipered externally once or twice a year when such conditions obtain, and the chimney should be removed at least annually to permit visual inspection of the upper tubes immediately below the chimney opening. A light blow by means of a long blunt bar is sometimes useful in locating any of the tubes that have wasted to a serious extent ; the lower tubes in the firebox being normally accessible for the customary hammer test. Thinning of the tube ends can be determined by using a prodding tool from the water side. (In passing it should be mentioned that soot blowers are now available for operation in this type of boiler, and remove much of the soot.)

The only other parts of the vertical water-tube boiler firebox calling for special comment are the areas which unite the tube-plates with the cylindrical lower portion of the firebox in one particular design, as illustrated in Fig. 32. These are subjected to the full radiant heat of the fire, and under forced conditions of operation, the metal thickness is sometimes appreciably reduced by pitting and general wasting on the water side. Each of the areas under consideration is a form of flat plate supported by the tube-plate and firebox walls and is usually much stronger than, say, the circular part of the firebox. A considerable amount of corrosion can therefore take place before the metal becomes dangerously thin, but when the remaining thickness approaches $\frac{5}{16}$-in. or so, it is advisable to restore the plate by electric welding deposits.

TABLE III.—FURNACE TABLES FOR EASY CALCULATION OF SAFE WORKING PRESSURE.

Thickness of Furnace Plate t in.	Furnace Length Between Points of Substantial Support L								
	ft. in. 1 6	ft. in. 1 7	ft. in. 1 8	ft. in. 1 9	ft. in. 1 10	ft. in. 1 11	ft. in. 2 0	ft. in. 2 1	ft. in. 2 2
$\frac{1}{4}$	**1691** 1516	**1652** 1481	**1614** 1447	**1579** 1415	**1544** 1384	**1511** 1355	**1480** 1327	**1450** 1300	**1421** 1274
$\frac{9}{32}$	**2209** 1981	**2158** 1935	**2109** 1891	**2062** 1849	**2017** 1808	**1974** 1770	**1933** 1733	**1894** 1698	**1856** 1664
$\frac{5}{16}$	**2796** 2507	**2731** 2449	**2669** 2393	**2610** 2340	**2553** 2289	**2499** 2240	**2447** 2193	**2396** 2149	**2349** 2106
$\frac{11}{32}$	**3452** 3095	**3372** 3023	**3295** 2954	**3222** 2888	**3152** 2826	**3085** 2766	**3020** 2708	**2959** 2653	**2900** 2600
$\frac{3}{8}$	**4177** 3745	**4080** 3658	**3989** 3575	**3897** 3495	**3814** 3419	**3733** 3347	**3655** 3277	**3580** 3210	**3509** 3146
$\frac{13}{32}$	**4971** 4457	**4856** 4353	**4747** 4254	**4640** 4160	**4538** 4069	**4442** 3983	**4350** 3900	**4261** 3820	**4176** 3744
$\frac{7}{16}$	**5600** 5040	**5550** 4995	**5500** 4950	**5445** 4882	**5327** 4776	**5214** 4674	**5105** 4577	**5001** 4483	**4901** 4394
$\frac{15}{32}$	**6100** 5490	**6050** 5445	**6000** 5400	**5950** 5355	**5900** 5310	**5850** 5265	**5800** 5220	**5750** 5175	**5684** 5096
$\frac{1}{2}$	**6600** 5940	**6550** 5895	**6500** 5850	**6450** 5805	**6400** 5760	**6350** 5715	**6300** 5670	**6250** 5625	**6200** 5580
$\frac{17}{32}$	**7100** 6390	**7050** 6345	**7000** 6300	**6950** 6255	**6900** 6210	**6850** 6165	**6800** 6120	**6750** 6075	**6700** 6030
$\frac{9}{16}$	**7600** 6840	**7550** 6795	**7500** 6750	**7450** 6705	**7400** 6660	**7350** 6615	**7300** 6570	**7250** 6525	**7200** 6480
$\frac{19}{32}$	**8100** 7290	**8050** 7245	**8000** 7200	**7950** 7155	**7900** 7110	**7850** 7065	**7800** 7020	**7750** 6975	**7700** 6930
$\frac{5}{8}$	**8600** 7740	**8550** 7695	**8500** 7650	**8450** 7605	**8400** 7560	**8350** 7515	**8300** 7470	**8250** 7425	**8200** 7380
$\frac{21}{32}$	**9100** 8190	**9050** 8145	**9000** 8100	**8950** 8055	**8900** 8010	**8850** 7965	**8800** 7920	**8750** 7875	**8700** 7830
$\frac{11}{16}$	**9600** 8640	**9550** 8595	**9500** 8550	**9450** 8505	**9400** 8460	**9350** 8415	**9300** 8370	**9250** 8325	**9200** 8280
$\frac{23}{32}$	**10100** 9090	**10050** 9045	**10000** 9000	**9950** 8955	**9900** 8910	**9850** 8865	**9800** 8820	**9750** 8775	**9700** 8730

Heavy type : Welded Seams. Light type : Riveted Seams.

While every care has been taken in the compilation of this Table, the publishers and the author cannot be held responsible for errors arising from its use.

Thickness of Furnace Plate t in.	Furnace Length Between Points of Substantial Support L								
	ft. in. 2 3	ft. in. 2 4	ft. in. 2 5	ft. in. 2 6	ft. in. 2 7	ft. in. 2 8	ft. in. 2 9	ft. in. 2 10	ft. in. 2 11
$\frac{1}{4}$	**1393** 1249	**1366** 1225	**1340** 1202	**1315** 1179	**1291** 1158	**1268** 1137	**1246** 1117	**1225** 1098	**1204** 1079
$\frac{9}{32}$	**1819** 1631	**1784** 1600	**1751** 1569	**1718** 1540	**1687** 1512	**1657** 1488	**1628** 1459	**1600** 1434	**1572** 1410
$\frac{5}{16}$	**2303** 2064	**2258** 2025	**2216** 1986	**2175** 1950	**2135** 1914	**2091** 1880	**2061** 1847	**2025** 1815	**1990** 1784
$\frac{11}{32}$	**2843** 2549	**2788** 2500	**2735** 2452	**2685** 2407	**2636** 2363	**2589** 2321	**2544** 2280	**2500** 2241	**2457** 2203
$\frac{3}{8}$	**3440** 3084	**3373** 3025	**3309** 2968	**3249** 2913	**3190** 2860	**3132** 2809	**3078** 2760	**3025** 2712	**2973** 2666
$\frac{13}{32}$	**4094** 3671	**4015** 3600	**3940** 3532	**3860** 3466	**3796** 3403	**3728** 3343	**3663** 3284	**3600** 3227	**3538** 3173
$\frac{7}{16}$	**4805** 4308	**4712** 4225	**4623** 4145	**4538** 4068	**4455** 3994	**4367** 3923	**4299** 3854	**4225** 3788	**4153** 3723
$\frac{15}{32}$	**5572** 4996	**5465** 4900	**5362** 4807	**5263** 4718	**5167** 4632	**5075** 4550	**4986** 4470	**4900** 4393	**4816** 4318
$\frac{1}{2}$	**6150** 5535	**6100** 5490	**6050** 5445	**6000** 5400	**5931** 5318	**5826** 5223	**5723** 5131	**5625** 5043	**5528** 4957
$\frac{17}{32}$	**6650** 5985	**6600** 5940	**6550** 5895	**6500** 5850	**6450** 5805	**6400** 5760	**6350** 5715	**6300** 5670	**6250** 5625
$\frac{9}{16}$	**7150** 6435	**7100** 6390	**7050** 6345	**7000** 6300	**6950** 6255	**6900** 6210	**6850** 6165	**6800** 6120	**6750** 6075
$\frac{19}{32}$	**7650** 6885	**7600** 6840	**7550** 6795	**7500** 6750	**7450** 6705	**7400** 6660	**7350** 6615	**7300** 6570	**7250** 6525
$\frac{5}{8}$	**8150** 7335	**8100** 7290	**8050** 7245	**8000** 7200	**7950** 7155	**7900** 7110	**7850** 7065	**7800** 7020	**7750** 6975
$\frac{21}{32}$	**8650** 7785	**8600** 7740	**8550** 7695	**8500** 7650	**8450** 7605	**8400** 7560	**8350** 7515	**8300** 7470	**8250** 7425
$\frac{11}{16}$	**9150** 8235	**9100** 8190	**9050** 8145	**9000** 8100	**8950** 8055	**8900** 8010	**8850** 7965	**8800** 7920	**8750** 7875
$\frac{23}{32}$	**9650** 8685	**9600** 8640	**9550** 8595	**9500** 8550	**9450** 8505	**9400** 8460	**9350** 8415	**9300** 8370	**9250** 8325

Heavy type : Welded Seams. Light type : Riveted Seams.

Thickness of Furnace Plate *t* in.	Furnace Length Between Points of Substantial Support L								
	ft. in. 3 0	ft. in. 3 1	ft. in. 3 2	ft. in. 3 3	ft. in. 3 4	ft. in. 3 5	ft. in. 3 6	ft. in. 3 7	ft. in. 3 8
$\frac{1}{4}$	**1184** 1061	**1164** 1044	**1146** 1027	**1128** 1011	**1110** 995	**1093** 980	**1076** 965	**1060** 950	**1044** 936
$\frac{9}{32}$	**1546** 1386	**1521** 1364	**1497** 1342	**1473** 1320	**1450** 1300	**1427** 1280	**1406** 1260	**1385** 1241	**1364** 1223
$\frac{5}{16}$	**1957** 1755	**1925** 1726	**1894** 1698	**1864** 1671	**1835** 1645	**1807** 1620	**1779** 1595	**1753** 1571	**1727** 1548
$\frac{11}{32}$	**2416** 2166	**2377** 2131	**2338** 2096	**2301** 2063	**2265** 2031	**2230** 2000	**2197** 1970	**2164** 1940	**2132** 1911
$\frac{3}{8}$	**2924** 2621	**2876** 2578	**2830** 2537	**2785** 2496	**2741** 2457	**2698** 2420	**2658** 2383	**2618** 2347	**2580** 2313
$\frac{13}{32}$	**3480** 3120	**3423** 3069	**3367** 3019	**3314** 2971	**3262** 2925	**3212** 2880	**3163** 2836	**3116** 2794	**3070** 2754
$\frac{7}{16}$	**4084** 3661	**4017** 3601	**3952** 3543	**3889** 3487	**3829** 3432	**3770** 3380	**3713** 3329	**3657** 3279	**3603** 3231
$\frac{15}{32}$	**4737** 4246	**4659** 4177	**4584** 4109	**4511** 4044	**4400** 3981	**4372** 3920	**4306** 3860	**4241** 3803	**4179** 3747
$\frac{1}{2}$	**5437** 4875	**5348** 4795	**5262** 4717	**5178** 4643	**5097** 4570	**5019** 4500	**4943** 4431	**4869** 4365	**4797** 4301
$\frac{17}{32}$	**6186** 5546	**6085** 5455	**5987** 5367	**5892** 5282	**5800** 5200	**5710** 5120	**5624** 5040	**5540** 4967	**5458** 4894
$\frac{9}{16}$	**6700** 6030	**6650** 5985	**6600** 5940	**6550** 5895	**6500** 5850	**6447** 5780	**6349** 5692	**6254** 5607	**6162** 5525
$\frac{19}{32}$	**7200** 6480	**7150** 6435	**7100** 6390	**7050** 6345	**7000** 6300	**6950** 6255	**6900** 6210	**6850** 6165	**6800** 6120
$\frac{5}{8}$	**7700** 6930	**7650** 6885	**7600** 6840	**7550** 6795	**7500** 6750	**7450** 6705	**7400** 6660	**7350** 6615	**7300** 6570
$\frac{21}{32}$	**8200** 7380	**8150** 7335	**8100** 7290	**8050** 7245	**8000** 7200	**7950** 7155	**7900** 7100	**7850** 7065	**7800** 7020
$\frac{11}{16}$	**8700** 7830	**8650** 7785	**8600** 7740	**8550** 7695	**8500** 7650	**8450** 7605	**8400** 7560	**8350** 7515	**8300** 7470
$\frac{23}{32}$	**9200** 8280	**9150** 8235	**9100** 8190	**9050** 8145	**9000** 8100	**8950** 8055	**8900** 8010	**8850** 7965	**8800** 7920

Heavy type : Welded Seams. Light type : Riveted Seams.

Thickness of Furnace Plate *t* in.	Furnace Length Between Points of Substantial Support L								
	ft. in. 3 9	ft. in. 3 10	ft. in. 3 11	ft. in. 4 0	ft. in. 4 1	ft. in. 4 2	ft. in. 4 3	ft. in. 4 4	ft. in. 4 5
$\frac{1}{4}$	**1029** 923	**1015** 910	**1000** 897	**986** 884	**973** 872	**960** 860	**947** 849	**900** 810	**850** 765
$\frac{9}{32}$	**1344** 1205	**1325** 1188	**1307** 1171	**1289** 1155	**1271** 1139	**1250** 1124	**1237** 1109	**1221** 1094	**1205** 1080
$\frac{5}{16}$	**1702** 1526	**1678** 1504	**1654** 1483	**1631** 1462	**1609** 1442	**1587** 1423	**1566** 1404	**1545** 1385	**1525** 1367
$\frac{11}{32}$	**2101** 1884	**2071** 1857	**2042** 1831	**2014** 1805	**1986** 1780	**1959** 1756	**1933** 1733	**1908** 1710	**1883** 1688
$\frac{3}{8}$	**2542** 2280	**2506** 2247	**2471** 2215	**2436** 2184	**2403** 2154	**2370** 2125	**2339** 2097	**2308** 2070	**2278** 2043
$\frac{13}{32}$	**3026** 2713	**2983** 2674	**2941** 2636	**2900** 2600	**2860** 2564	**2821** 2530	**2784** 2496	**2747** 2463	**2711** 2431
$\frac{7}{16}$	**3551** 3184	**3500** 3138	**3451** 3094	**3403** 3051	**3356** 3009	**3311** 2969	**3266** 2929	**3224** 2890	**3182** 2853
$\frac{15}{32}$	**4118** 3692	**4060** 3640	**4003** 3588	**3947** 3539	**3893** 3490	**3840** 3443	**3789** 3397	**3739** 3352	**3691** 3309
$\frac{1}{2}$	**4728** 4239	**4660** 4178	**4595** 4119	**4531** 4062	**4468** 4006	**4408** 3952	**4350** 3900	**4293** 3848	**4237** 3798
$\frac{17}{32}$	**5379** 4823	**5303** 4754	**5228** 4687	**5155** 4622	**5085** 4559	**5016** 4498	**5940** 4437	**4884** 4379	**4820** 4322
$\frac{9}{16}$	**6073** 5445	**5986** 5367	**5902** 5292	**5820** 5218	**5740** 5146	**5662** 5077	**5587** 5009	**5513** 4943	**5442** 4879
$\frac{19}{32}$	**6750** 6075	**6711** 6017	**6617** 5932	**6525** 5850	**6435** 5770	**6348** 5692	**6264** 5616	**6181** 5542	**6101** 5470
$\frac{5}{8}$	**7250** 6525	**7200** 6480	**7150** 6435	**7100** 6390	**7050** 6345	**7000** 6300	**6950** 6250	**6887** 6175	**6798** 6095
$\frac{21}{32}$	**7750** 6975	**7700** 6930	**7650** 6885	**7600** 6840	**7550** 6795	**7500** 6750	**7450** 6705	**7400** 6660	**7350** 6615
$\frac{11}{16}$	**8250** 7425	**8200** 7380	**8150** 7335	**8100** 7290	**8050** 7245	**8000** 7200	**7950** 7155	**7900** 7100	**7850** 7065
$\frac{23}{32}$	**8750** 7875	**8700** 7830	**8650** 7785	**8600** 7740	**8550** 7695	**8500** 7650	**8450** 7605	**8400** 7560	**8350** 7515

Heavy type : Welded Seams. Light type : Riveted Seams.

Thickness of Furnace Plate t in.	Furnace Length Between Points of Substantial Support L								
	ft. in. 4 6	ft. in. 4 7	ft. in. 4 8	ft. in. 4 9	ft. in. 4 10	ft. in. 4 11	ft. in. 5 0	ft. in. 5 1	ft. in. 5 2
$\frac{1}{4}$	**800** 720	**750** 675	**700** 630	**650** 585	**600** 540	**550** 495	**500** 450	**450** 405	**400** 360
$\frac{}{32}$	**1190** 1066	**1174** 1053	**1160** 1040	**1145** 1027	**1100** 990	**1050** 945	**1000** 900	**950** 855	**900** 810
$\frac{5}{16}$	**1505** 1350	**1486** 1333	**1468** 1316	**1450** 1300	**1432** 1284	**1415** 1268	**1398** 1253	**1381** 1238	**1365** 1224
$\frac{11}{32}$	**1859** 1666	**1835** 1645	**1812** 1625	**1790** 1605	**1768** 1585	**1747** 1566	**1726** 1547	**1706** 1529	**1686** 1511
$\frac{3}{8}$	**2249** 2016	**2221** 1991	**2193** 1966	**2166** 1942	**2139** 1918	**2113** 1895	**2088** 1872	**2064** 1850	**2040** 1829
$\frac{13}{32}$	**2677** 2400	**2643** 2369	**2610** 2340	**2577** 2311	**2546** 2282	**2515** 2255	**2485** 2228	**2456** 2202	**2428** 2176
$\frac{7}{16}$	**3141** 2816	**3102** 2781	**3063** 2746	**3025** 2712	**2989** 2679	**2952** 2647	**2917** 2615	**2883** 2584	**2849** 2554
$\frac{15}{32}$	**3643** 3266	**3596** 3225	**3552** 3185	**3508** 3145	**3465** 3107	**3424** 3069	**3383** 3033	**3343** 2997	**3304** 2962
$\frac{1}{2}$	**4182** 3750	**4129** 3702	**4078** 3656	**4027** 3611	**3978** 3567	**3930** 3524	**3883** 3482	**3838** 3441	**3793** 3401
$\frac{17}{32}$	**4759** 4266	**4698** 4213	**4640** 4160	**4583** 4108	**4527** 4058	**4473** 4009	**4419** 3961	**4367** 3915	**4318** 3869
$\frac{9}{16}$	**5372** 4816	**5304** 4755	**5238** 4696	**5173** 4638	**5110** 4581	**5048** 4526	**4988** 4472	**4930** 4420	**4872** 4368
$\frac{19}{32}$	**6023** 5400	**5946** 5331	**5872** 5265	**5800** 5200	**5729** 5136	**5660** 5074	**5592** 5014	**5527** 4955	**5462** 4897
$\frac{5}{8}$	**6711** 6016	**6625** 5940	**6543** 5866	**6462** 5783	**6383** 5723	**6306** 5654	**6231** 5587	**6158** 5521	**6086** 5456
$\frac{21}{32}$	**7300** 6570	**7250** 6525	**7200** 6480	**7150** 6419	**7073** 6341	**6988** 6265	**6904** 6190	**6823** 6117	**6744** 6046
$\frac{11}{16}$	**7800** 7020	**7750** 6975	**7700** 6930	**7650** 6885	**7600** 6840	**7550** 6795	**7500** 6750	**7450** 6705	**7400** 6660
$\frac{23}{32}$	**8300** 7470	**8250** 7425	**8200** 7380	**8150** 7335	**8100** 7290	**8050** 7245	**8000** 7200	**7950** 7155	**7900** 7110
$\frac{3}{4}$					**8600** 7740	**8550** 7695	**8500** 7650	**8450** 7605	**8400** 7560
$\frac{25}{32}$					**9100** 8190	**9050** 8145	**9000** 8100	**8950** 8055	**8900** 8010
$\frac{13}{16}$					**9600** 8640	**9550** 8595	**9500** 8550	**9450** 8505	**9400** 8460

Heavy type : Welded Seams. Light type : Riveted Seams.

Thickness of Furnace Plate t in.	Furnace Length Between Points of Substantial Support L								
	ft. in. 5 3	ft. in. 5 4	ft. in. 5 5	ft. in. 5 6	ft. in. 5 7	ft. in. 5 8	ft. in. 5 9	ft. in. 5 10	ft. in. 5 11
$\frac{1}{4}$	**350** 315	**300** 270	**250** 225	**200** 180	**150** 135	**100** 90	**50** 45		
$\frac{9}{32}$	**850** 765	**800** 720	**750** 675	**700** 630	**650** 585	**600** 540	**550** 495	**500** 450	**450** 405
$\frac{5}{16}$	**1350** 1210	**1300** 1170	**1250** 1125	**1200** 1080	**1150** 1035	**1100** 990	**1050** 945	**1000** 900	**950** 855
$\frac{11}{32}$	**1666** 1494	**1647** 1477	**1629** 1460	**1611** 1444	**1593** 1428	**1576** 1413	**1550** 1395	**1500** 1350	**1450** 1305
$\frac{3}{8}$	**2016** 1808	**1993** 1787	**1971** 1767	**1949** 1747	**1928** 1728	**1907** 1709	**1886** 1691	**1866** 1673	**1846** 1655
$\frac{13}{32}$	**2400** 2151	**2372** 2127	**2346** 2103	**2320** 2080	**2294** 2057	**2269** 2034	**2245** 2013	**2221** 1991	**2198** 1970
$\frac{7}{16}$	**2816** 2525	**2784** 2496	**2753** 2468	**2722** 2441	**2692** 2414	**2663** 2388	**2635** 2362	**2607** 2337	**2579** 2312
$\frac{15}{32}$	**3266** 2928	**3229** 2895	**3193** 2862	**3157** 2831	**3123** 2800	**3089** 2769	**3055** 2739	**3023** 2710	**2991** 2682
$\frac{1}{2}$	**3750** 3362	**3707** 3324	**3665** 3286	**3625** 3250	**3585** 3214	**3546** 3179	**3508** 3145	**3470** 3111	**3434** 3078
$\frac{17}{32}$	**4266** 3825	**4218** 3781	**4170** 3739	**4124** 3697	**4079** 3657	**4034** 3617	**3991** 3578	**3948** 3540	**3907** 3503
$\frac{9}{16}$	**4816** 4318	**4762** 4269	**4708** 4221	**4656** 4174	**4605** 4128	**4554** 4083	**4505** 4039	**4457** 3996	**4411** 3954
$\frac{19}{32}$	**5400** 4841	**5338** 4786	**5278** 4732	**5220** 4680	**5163** 4628	**5107** 4578	**5051** 4529	**4997** 4480	**4945** 4433
$\frac{5}{8}$	**6016** 5394	**5948** 5332	**5881** 5273	**5816** 5214	**5752** 5157	**5689** 5101	**5628** 5046	**5568** 4993	**5510** 4940
$\frac{21}{32}$	**6666** 5977	**6590** 5909	**6516** 5842	**6444** 5777	**6373** 5714	**6304** 5652	**6236** 5591	**6170** 5531	**6105** 5473
$\frac{11}{16}$	**7350** 6589	**7266** 6515	**7184** 6441	**7105** 6370	**7027** 6300	**6950** 6231	**6875** 6164	**6802** 6099	**6731** 6034
$\frac{23}{32}$	**7850** 7065	**7800** 7020	**7750** 6975	**7700** 6930	**7650** 6885	**7600** 6839	**7546** 6765	**7466** 6693	**7387** 6623
$\frac{3}{4}$	**8350** 7515	**8300** 7470	**8250** 7425	**8200** 7380	**8150** 7335	**8100** 7290	**8050** 7245	**8000** 7200	**7950** 7155
$\frac{25}{32}$	**8850** 7965	**8800** 7920	**8750** 7875	**8700** 7830	**8650** 7785	**8600** 7740	**8550** 7695	**8500** 7650	**8450** 7605
$\frac{13}{16}$	**9350** 8415	**9300** 8370	**9250** 8325	**9200** 8280	**9150** 8235	**9100** 8190	**9050** 8145	**9000** 8100	**8950** 8055

Heavy type : Welded Seams. Light type : Riveted Seams.

Thickness of Furnace Plate *t* in.	Furnace Length Between Points of Substantial Support L								
	ft. in. 6 0	ft. in. 6 1	ft. in. 6 2	ft. in. 6 3	ft. in. 6 4	ft. in. 6 5	ft. in. 6 6	ft. in. 6 7	ft. in. 6 8
$\frac{9}{32}$	**400** 360	**350** 315	**300** 270	**250** 225	**200** 180	**150** 135	**100** 90	**50** 45	
$\frac{5}{16}$	**900** 810	**850** 765	**800** 720	**750** 675	**700** 630	**650** 585	**600** 540	**550** 495	**500** 450
$\frac{11}{32}$	**1400** 1260	**1350** 1215	**1300** 1170	**1250** 1125	**1200** 1080	**1150** 1035	**1100** 990	**1050** 945	**1000** 900
$\frac{3}{8}$	**1827** 1638	**1808** 1621	**1790** 1605	**1750** 1575	**1700** 1530	**1650** 1485	**1600** 1440	**1550** 1395	**1500** 1350
$\frac{13}{32}$	**2175** 1950	**2152** 1929	**2130** 1910	**2109** 1890	**2088** 1872	**2067** 1853	**2047** 1835	**2027** 1817	**2000** 1800
$\frac{7}{16}$	**2552** 2288	**2526** 2264	**2500** 2241	**2475** 2219	**2450** 2197	**2426** 2175	**2402** 2153	**2379** 2133	**2356** 2113
$\frac{15}{32}$	**2960** 2654	**2929** 2626	**2900** 2600	**2870** 2573	**2842** 2548	**2813** 2522	**2786** 2498	**2759** 2473	**2732** 2450
$\frac{1}{2}$	**3398** 3046	**3363** 3015	**3329** 2984	**3295** 2954	**3262** 2925	**3230** 2896	**3198** 2867	**3167** 2839	**3137** 2812
$\frac{17}{32}$	**3866** 3466	**3826** 3430	**3787** 3395	**3749** 3361	**3712** 3328	**3675** 3295	**3639** 3262	**3603** 3231	**3569** 3200
$\frac{9}{16}$	**4365** 3913	**4320** 3873	**4276** 3833	**4232** 3794	**4190** 3757	**4149** 3719	**4108** 3683	**4068** 3647	**4029** 3612
$\frac{19}{32}$	**4893** 4387	**4843** 4342	**4793** 4297	**4745** 4254	**4698** 4212	**4651** 4170	**4605** 4129	**4561** 4089	**4517** 4050
$\frac{5}{8}$	**5452** 4889	**5396** 4838	**5341** 4788	**5287** 4740	**5234** 4693	**5182** 4646	**5131** 4600	**5082** 4556	**5033** 4512
$\frac{21}{32}$	**6041** 5416	**5979** 5360	**5918** 5306	**5858** 5252	**5800** 5200	**5742** 5148	**5686** 5098	**5631** 5048	**5576** 5000
$\frac{11}{16}$	**6660** 5972	**6592** 5910	**6225** 5850	**6459** 5790	**6394** 5733	**6331** 5676	**6269** 5620	**6208** 5566	**6148** 5512
$\frac{23}{32}$	**7310** 6554	**7235** 6486	**7161** 6420	**7088** 6355	**7018** 6292	**6948** 6229	**6880** 6168	**6813** 6108	**6748** 6050

Heavy type : Welded Seams. Light type : Riveted Seams.

Printed by ODHAMS PRESS Ltd., Long Acre, London, W.C.2. and Published by the Proprietors.
JOHN D. TROUP, Ltd., 90-91, High Holborn, London, W.C.1.

REPRINTED FROM

The STEAM ENGINEER

A practical journal devoted to reducing fuel costs

JANUARY TO JULY, 1947